Model SEC 400
Hog Splitting Saw

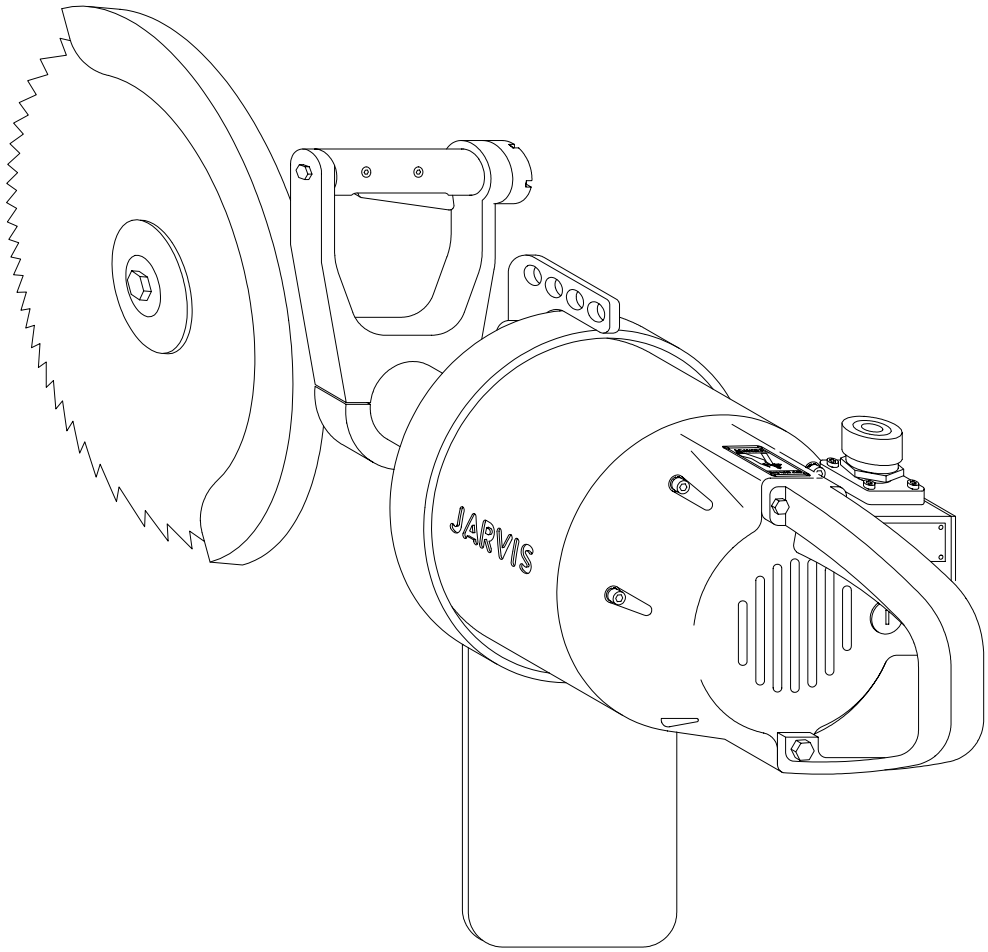

EQUIPMENT SELECTION . . . . . Ordering No.	TABLE OF CONTENTS . . . . . Page
SEC 400 without Controller	• Safety Messages to Employer and Safety Director 2
42V/50Hz (21 inch Blade) 4004077	• Safety Messages to Operators, Maintenance and Cleanup Personnel 3
230V/60Hz (16 inch Blade) 4004076	• Parts Diagram and List 4
460V/60Hz (16 inch Blade) 4004086	• Wiring Diagrams 16
SEC 400 with Mechanical Brake for Part Numbers: . . . . . See pg. 13	• Special Tools 19
SEC 400 with Thin Head (16 inch Blade)	• Specifications 20
230V/60Hz (Electric / DC Brake) 4004135	• Installation Instructions 20
460V/60Hz (Mechanical Brake) . 4004132	• Operation Instructions 20
SEC 400 with Electric / DC Braking for Part Numbers: (3 Phase) . See pg. 14	• Maintenance Instructions 21
Balancer	
Mechanical Brake 4042049	
Electric Brake 4042036	

JARVIS ®
6204004;.

PRODUCTS CORPORATION
33 ANDERSON ROAD, MIDDLETOWN, CONNECTICUT 06457-4926
UNITED STATES OF AMERICA E-MAIL.jarvis.products.corp@snet.net
TEL. 860-347-7271 FAX. 860-347-6978 WWW.jarvisproducts.com

SAFETY MESSAGES TO EMPLOYER AND SAFETY DIRECTOR

AVOID INJURY

1. **Remove** and **repair** any tool that malfunctions. All personnel must be instructed to remove any malfunctioning equipment.
2. **Ensure** that all employees who use this tool are trained in the proper use of this tool and are aware of the dangers that may arise if they do not follow procedures outlined in this brochure.
3. **Ensure** that all employees are instructed not to walk in front of the tool during its use.
4. **Enclosed** are four (4) copies of **"NOTICE TO OPERATORS, MAINTENANCE AND CLEANUP PERSONNEL."** Post one copy on the employees' bulletin board; give one copy to the operator(s); give one copy to the maintenance foreman; and give one copy to the sub-contract cleanup / internal cleanup foreman. *Additional copies will be provided upon request.*
5. The tool is designed and intended to be powerful. This fact should be obvious to your employees, but you must emphasize it to them.
6. **Ensure** that eye protection is worn in accordance with OSHA's eye and face protection requirements (29 CFR 1910.133) when operating tool.
7. **Never** make modifications or alterations to the tool. *Replace any missing or illegible labels.*
8. **Ensure** that proper procedures are established in accordance with OSHA's lockout/tagout procedures (29 CFR 1910.147) to prevent accidental startup or release of stored energy.
9. **Follow** our installation and maintenance instructions for proper installation and care of the tool.
10. **Avoid** injury. Do not permit the tool to be misused.
11. **If** you **resell** or **distribute** a Jarvis product, you must provide the purchaser with the appropriate safety sheets and tool brochure. *Additional copies of safety sheets and tool brochures will be provided upon request.*

JARVIS®
6204004;.
PRODUCTS CORPORATION
33 ANDERSON ROAD, MIDDLETOWN, CONNECTICUT 06457-4926
UNITED STATES OF AMERICA E-MAIL.jarvis.products.corp@snet.net
TEL. 860-347-7271 FAX. 860-347-6978 WWW.jarvisproducts.com

SAFETY MESSAGES TO OPERATORS, MAINTENANCE AND CLEANUP PERSONNEL

REMOVE ANY MALFUNCTIONING TOOL FROM SERVICE
REPORT ANY PROBLEMS TO YOUR SUPERVISOR

1. **Disconnect** the power supply in accordance with OSHA's lockout/tagout procedures (29 CFR 1910.147) before making any blade changes.
2. **Disconnect** the power supply in accordance with OSHA's lockout/tagout procedures (29 CFR 1910.147) before performing any repair or maintenance.
3. **Disconnect** the power supply – or have the power supply disconnected – in accordance with OSHA's lockout/tagout procedures (29 CFR 1910.147) before performing any cleanup.
4. **Disconnect** the power supply when the tool is not being used.
5. **Always** wear eye protection in accordance with OSHA's eye and face protection requirements (29 CFR 1910.133) when operating the tool.
6. **Never** put fingers, hands or other parts of the body on the cutting edge or within the cutting path of the tool.
7. **Never** allow people to walk in front of the tool during its use.
8. **Never** allow people to hold / restrain the carcass while operating the tool.
9. **Test** the tool prior to use or daily. **Depress** each trigger separately and the tool should not start. **Depress** one trigger, then pause one second and depress the other trigger and the tool should not start. **Repeat** this procedure reversing the triggers. **Depress** both triggers simultaneously and the tool should start. With the tool running, release one trigger and the tool should stop. **Continue** holding the depressed trigger and then depress the other trigger. The tool should not start. **Repeat** this procedure holding the other trigger. *If the tool malfunctions, remove it from service and report or repair it immediately.*
10. **Test** the **brake** prior to use or daily. After releasing either or both triggers, the blade should stop within 1.5 seconds. *If the tool malfunctions, remove it from service and report or repair it immediately.*
11. **Never** depress the triggers unless you want to use or test the tool.
12. **Never** make modifications or alterations to the tool. *Report or replace any missing or illegible labels.*
13. **Always** use both hands when starting and operating the tool to avoid the risk of possible "kick back" or "recoil". Continue holding the tool with both hands until the saw blade comes to a complete stop.

PRODUCTS CORPORATION
33 ANDERSON ROAD, MIDDLETOWN, CONNECTICUT 06457-4926
UNITED STATES OF AMERICA E-MAIL.jarvis.products.corp@snet.net
TEL. 860-347-7271 FAX. 860-347-6978 WWW.jarvisproducts.com

Figure A

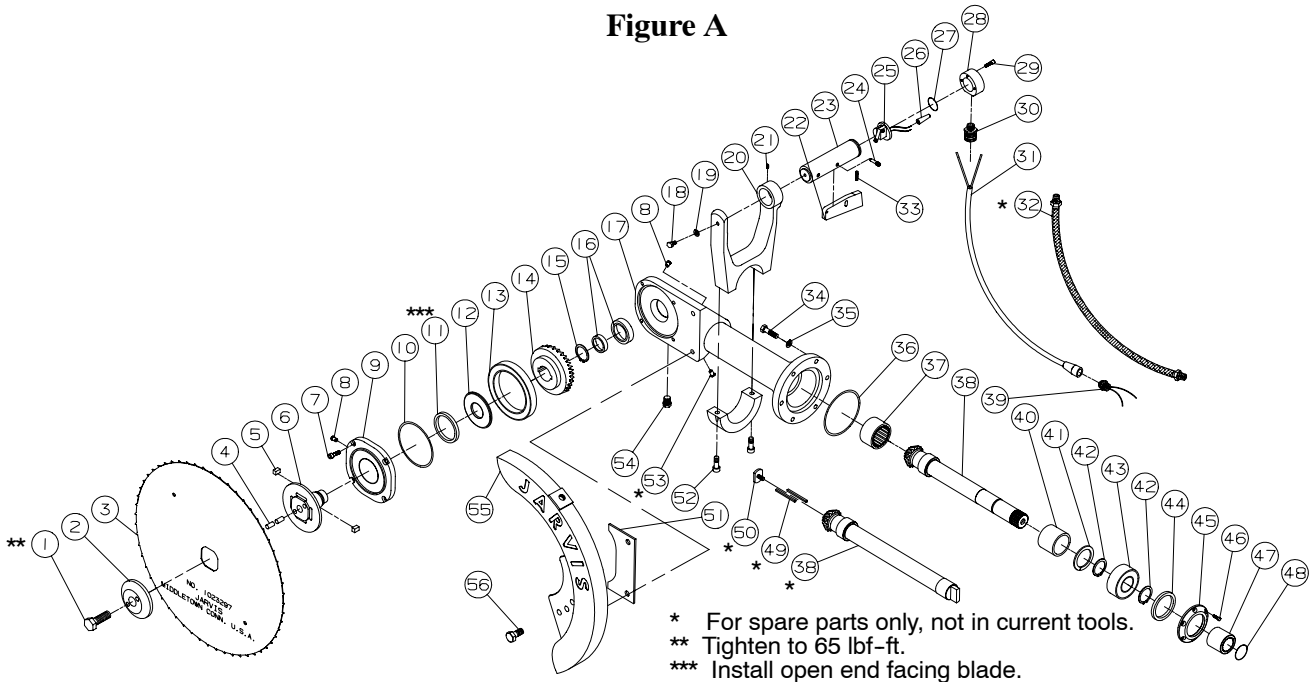

* For spare parts only, not in current tools.
** Tighten to 65 lbf-ft.
*** Install open end facing blade.

ITEM	PART NO.	PART NAME	QTY
1	1055749**	Hex Head Screw	1
2	1012076	Blade Clamp	1
3	1023297	Standard Blade (16 inch)	1
	1023284	Saw Blade (18 inch)	
	1023290	Saw Blade (21 inch)	
4	1010360	Dowel Pin	2
5	1030053	Key	2
6	1020222	Blade Mounting Shaft (includes item 4)	1
7	1055746	Socket Head Cap Screw	4
8	1038011	Grease Fitting	2
9	1002312	Gear Box Cover	1
10	1035371	O-ring	1
11	1035256	Shaft Seal	1
12	1032322	Bearing Plate	1
13	1021328	Ball Bearing	1
14	1026151	Crown Gear, Std	1
	1026199	Crown Gear, Low Speed	
15	1013212	Retaining Ring	1
16	1021276	Cylindrical Bearing	1
17	1016462	Gear Housing (2.84 dia.)	1
18	1055613	Hex Head Screw	2
19	1004245	Flat Washer	1
20	1042266*	Ft Hdl Bkt (2.44 dia Gr Hsg)	1
	1042339	Ft Hdl Bkt (2.84 dia Gr Hsg)	1
21	1055743	Set Screw	2
22	1018120	Trigger Lever (with Item 33)	1
23	1019140	Front Handle Grip	1
24	1010334	Threaded Pin	4
25	3005026	Switch Assembly	1
26	1063009	Wire Nut	2
27	1035375	O-ring	1
28	1002314	Front Handle Cover	1
29	1055744	Socket Head Cap Screw	3
30	1011305	Connector	1
31	1001122	Molded Plug and Wire	1
32	1059056*	Hose Assembly	1
33	1014150	Compression Spring	1

ITEM	PART NO.	PART NAME	QTY
34	1055753	Hex Head Screw	7
35	1004232	Split Lock Washer	7
36	1035372	O-ring	1
37	1021327	Needle Bearing	1
38	1026164	Pinion Gr. Sft (Splined, 15T)	1
	1026180*	Pinion Gr. Sft (Tang, 15T)	
	1026198	Pinion Gr. Sft (Splined, 13T) Low Speed	
39	1063220	Connector	1
40	1036190	Inner Ring Bushing	1
41	1013237	Retaining Ring	1
42	1013243	Retaining Ring	2
43	1021329	Ball Bearing	1
44	1035537	Oil Seal	1
45	1013208	Thrust Ring	1
46	1055617	Socket Head Cap Screw	6
47	1011301	Splined Coupling	1
48	1035534	O-ring	1
49	1030052*	Key	2
50	1054132*	Special Screw	1
51	1035367	Guard Gasket	1
52	1055748	Socket Head Cap Screw	2
53	1038025*	Grease Relief Fitting	1
54	1050607	Hex Head Plug	1
55	1024125	Blade Guard (16 inch blade)	1
	1024128	Blade Guard (18 inch blade)	
	1024131	Blade Guard (21 inch blade)	
56	1055750	Hex Head Screw	2
	3016271	Gear Hsg. Assy (incls. 1, 2, 4-17, 34-38, 40-46 and 54)	
	3016381	Gear Hsg. Assy, Low Speed	
	3019143	Front Handle Assy (incls. items 18-31, 33, 39 and 52)	
	3011022	Coupling and Seal Assy (incls. items 47 and 48)	
	3013005	Thrust Ring Seal Assy (incls. items 44 and 45)	

JARVIS®
6204004;.
PRODUCTS CORPORATION
33 ANDERSON ROAD, MIDDLETOWN, CONNECTICUT 06457-4926
UNITED STATES OF AMERICA E-MAIL.jarvis.products.corp@snet.net
TEL. 860-347-7271 FAX. 860-347-6978 WWW.jarvisproducts.com

JARVIS
Model SEC 400

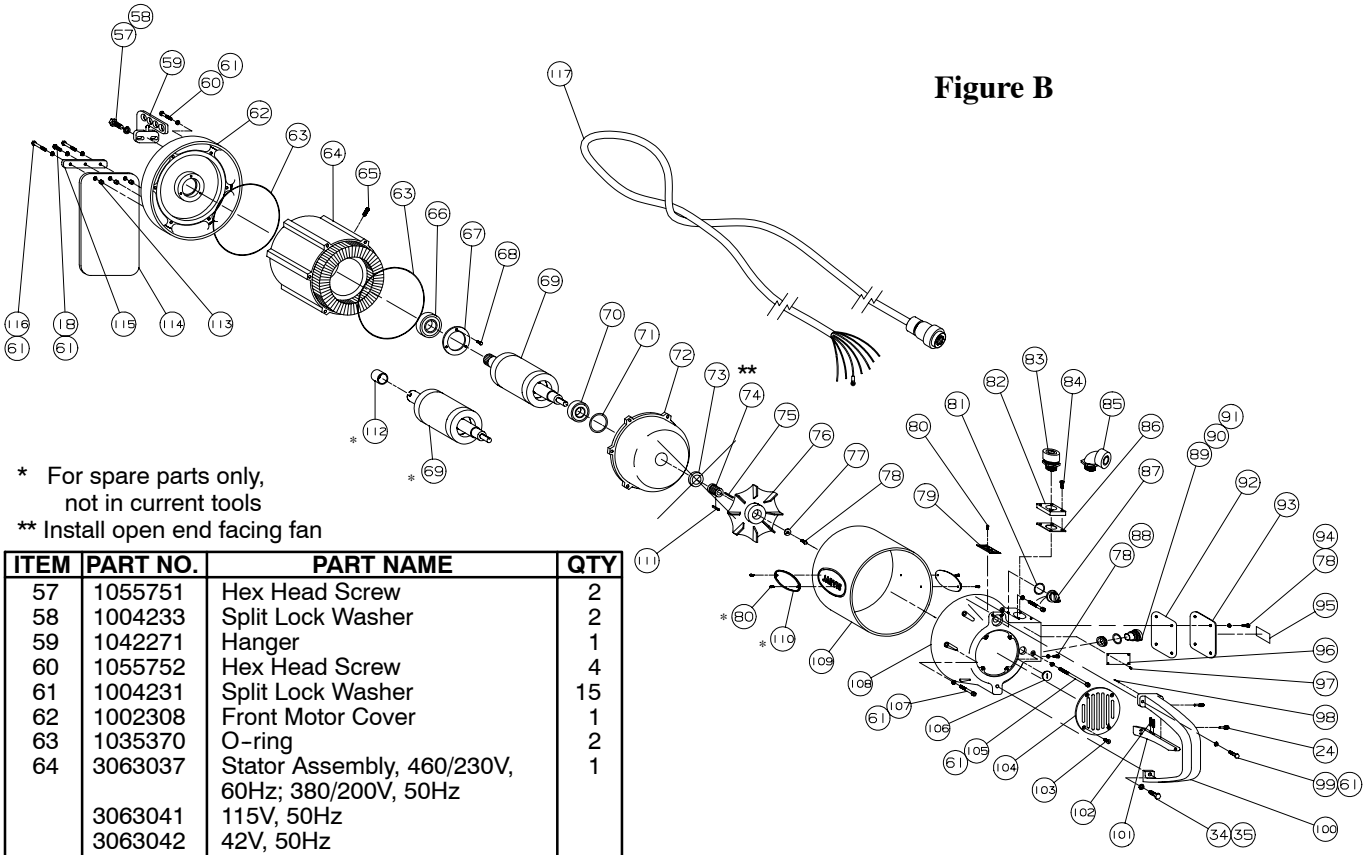

Figure B

* For spare parts only, not in current tools
** Install open end facing fan

ITEM	PART NO.	PART NAME	QTY
57	1055751	Hex Head Screw	2
58	1004233	Split Lock Washer	2
59	1042271	Hanger	1
60	1055752	Hex Head Screw	4
61	1004231	Split Lock Washer	15
62	1002308	Front Motor Cover	1
63	1035370	O-ring	2
64	3063037	Stator Assembly, 460/230V, 60Hz; 380/200V, 50Hz	1
	3063041	115V, 50Hz	
	3063042	42V, 50Hz	
	3063047	575V, 60Hz	
	3063110	380V, 60Hz	
	3063123	208V, 60Hz	
	3063125	415V, 50Hz	
	3063127	220V, 50Hz	
65	1055757	Set Screw (with Item 64)	2
66	1021302	Ball Bearing	1
67	1013207	Bearing Retaining Ring	1
68	1055754	Hex Head Screw	3
69	1064038	Rotor (Spline Drive)	1
	1064028*	Rotor (Tang Drive)	1
70	1021330	Ball Bearing	1
71	1014101	Wave Spring	1
72	1002307	Rear Motor Cover	1
	1002553	Rear Motor Cover, 42 & 115V	
73	1035368	Shaft Seal	1
74	1061527	Fan Driver	1
75	1030051	Key	1
76	1061528	Fan	1
77	1004229	Fender Washer	2
78	1055755	Hex Head Screw	6
79	1017081	Danger Label	1
80	1055779*	Cheese Head Screw	4
81	1035282	O-ring	1
82	1032397	Adapter Plate	1
83	1011286	Connector, Straight, 42 & 115V	1
84	1055845	Pan Head Screw	4
85	1011304	Connector, Elbow	1
86	1035457	Gasket	1
87	3005042	Switch Assembly	1
88	1004234	Serrated Lock Washer	1
89	1063414	Motor Conduit	1
	1063524	Motor Conduit, 42 & 115V	
90	1035374	Grommet	1

ITEM	PART NO.	PART NAME	QTY
91	1035373	O-ring	1
92	1035366	Electrical Box Gasket	1
93	1002313	Electrical Box Cover	1
94	1004230	Split Lock Washer	4
95	1017085	Electrical Label	1
96	1017158	Information Label	1
97	1055039	Drive Screw	4
98	1010504	Roll Pin	1
99	1055720	Button Head Screw	2
100	1019139	Rear Handle with item 98	1
101	1018121	Trigger Lever with item 102	1
102	1014153	Compression Spring	2
103	1055838	Oval Head Screw	4
104	1032357	Air Inlet Plate	1
105	1055747	Socket Head Cap Screw	1
106	1061530	Plug	1
107	1055611	Socket Head Cap Screw	5
108	1002306	Fan Cover	1
109	1002315	Motor Cover	1
	1002320	Motor Cover, 42 & 115V	
110	1017168*	Nameplate Label	2
111	1030068	Key	1
112	1009124*	Sleeve (incl. with item 69)	1
113	1029301	Spacer	3
114	1024126	Splash Guard	1
115	1042272	Splash Guard Bracket	1
116	1055790	Hex Head Screw	2
117	see page 6	Cord Assembly	1
	3019144	Rear Handle Assy (includes items 24, 34, 35, 61, 81, 87, 98-102)	
	8039097	Complete Tool Kit - pg 19	

JARVIS®
6204004;.
PRODUCTS CORPORATION
33 ANDERSON ROAD, MIDDLETOWN, CONNECTICUT 06457-4926
UNITED STATES OF AMERICA E-MAIL.jarvis.products.corp@snet.net
TEL. 860-347-7271 FAX. 860-347-6978 WWW.jarvisproducts.com

Figure C
Mechanical Brake Parts

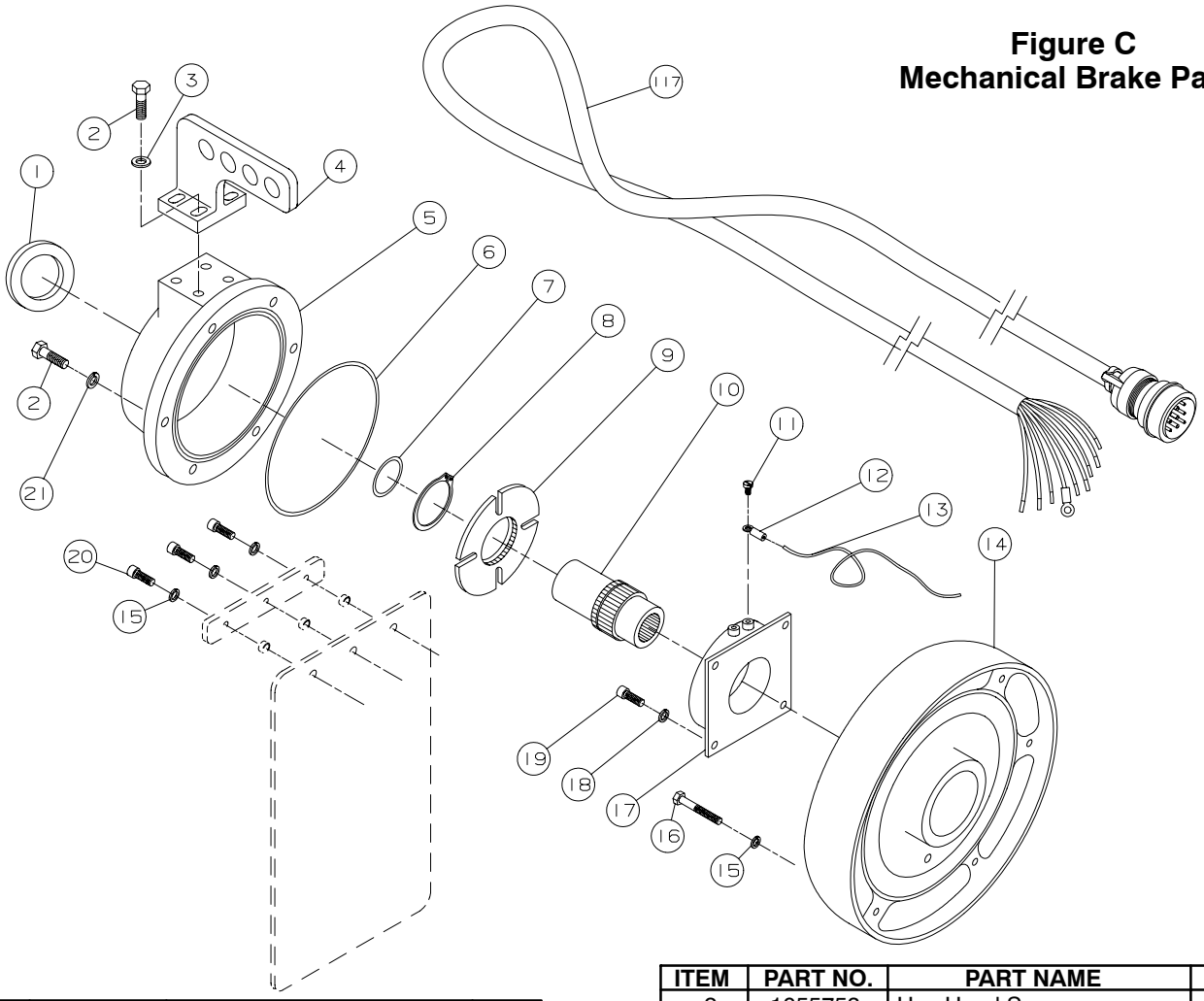

ITEM	PART NO.	PART NAME	QTY
117		DC Brake:	
		200-460V	
	3001018	Cord and Conn. with Insert	1
	1063634	Conn. with Male Pins Insert	
	1063638	Insert with Male Pins	
	1001080	Cord, 7 Conductor, 20 ft	
		575V	
	3001021	Cord and Conn. with Insert	1
	1063628	Connector Shell	
	1063626	Insert with Male Pins	
	1001080	Cord, 7 Conductor, 20 ft	
		Mechanical Brake:	
		200-460V	
	3001019	Cord & Conn, Mech. Brake	1
	1063751	Conn. with Male Pins Insert	
	1063805	Insert with Male Pins	
	1012091	Cable Clamp	
	1001127	Cord, 9 Conductor	
		115V Mech. Brake	
	3001022	Cord & Conn., Mech. Brake	1
	1063760	Conn. with Male Pins Insert	
	1063849	Insert with Male Pins	
	1001127	Cord, 9 Conductor	
1	1035538	Oil Seal	1

ITEM	PART NO.	PART NAME	QTY
2	1055753	Hex Head Screw	10
3	1004017	Flat Washer	4
4	1042347	Hanger	1
5	1016469	Brake Housing with item 1	1
6	1035496	O-ring	1
7	1014155	Wave Spring	1
8	1013127	Retaining Ring	1
9	1032451	Splined Plate	1
10	1011311	Splined Coupling	1
11	1055117	Round Head Screw	2
12	1063244	Ring Tongue	2
13	1001126	Wire	4 ft
14	1002371	Front Motor Cover	1
15	1004231	Lock Washer	9
16	1055934	Hex Head Screw	6
17	1072048	Brake Coil, 115-575V	1
	1072049	Brake Coil, 42V only	
		(incl. items 18 and 19)	1
18	1004015	Lock Washer	4
19	1055946	Socket Head Cap Screw	4
20	1055613	Hex Head Screw	3
21	1004232	Lock Washer	6
	3061215	Mechanical Brake Kit, 115V	
	3061216	Mechanical Brake Kit, 230V	
	3061217	Mechanical Brake Kit, 460V	

JARVIS®
PRODUCTS CORPORATION
33 ANDERSON ROAD, MIDDLETOWN, CONNECTICUT 06457-4926
UNITED STATES OF AMERICA E-MAIL.jarvis.products.corp@snet.net
TEL. 860-347-7271 FAX. 860-347-6978 WWW.jarvisproducts.com

Figure D

Thin Head

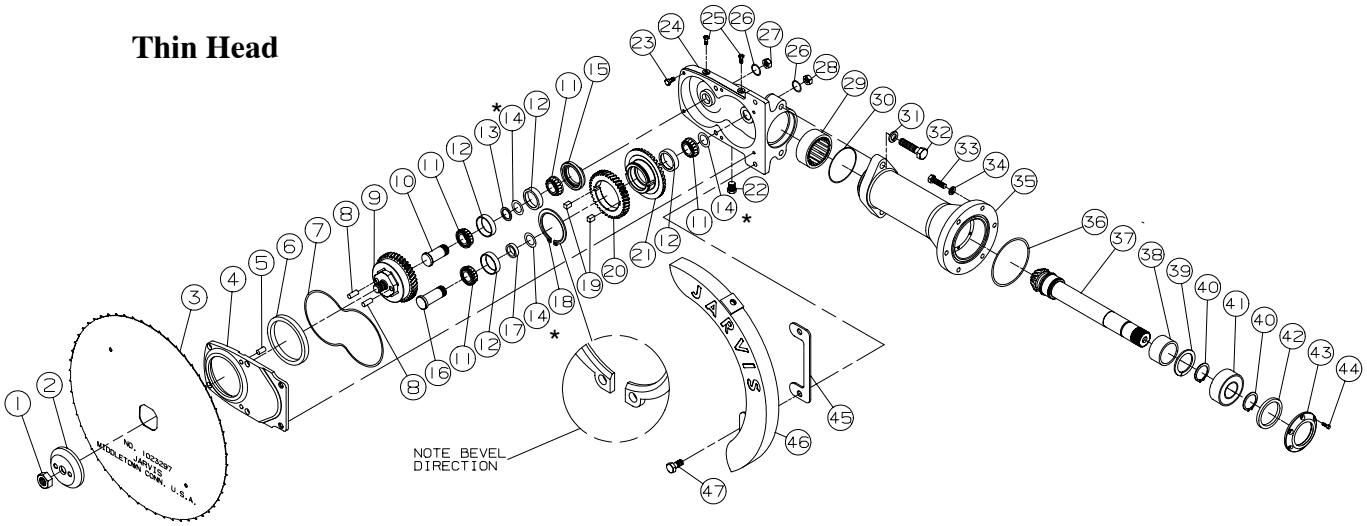

* Shim package contains 3 shims 0.005 inch thick and 6 shims 0.002 inch thick. Install only as many shims as necessary to obtain proper fit.

ITEM	PART NO.	PART NAME	QTY
1	1007337	Hex Nut	1
2	1012106	Blade Clamp	1
3	1023297	Standard Blade (16 inch)	1
	1023284	Saw Blade (18 inch)	
	1023290	Saw Blade (21 inch)	
4	1002413	Gearbox Cover	1
5	1010448	Dowel Pin	2
6	1035559	Shaft Seal	1
7	1035558	O-ring	1
8	1010449	Dowel Pin (with item 9)	2
9	1026203	Gear and Blade Shaft	1
10	1027067	Short Stud	1
11	1021406	Tapered Bearing Cone	4
12	1021407	Tapered Bearing Cup	4
13	1029350	Thin Spacer	1
14	3069001*	Shim Package	3
15	1012107	Bearing Clamp	1
16	1027066	Long Stud	1
17	1029349	Thick Spacer	1
18	1013271	External Retaining Ring	1
19	1030073	Key	2
20	1026202	Helical Spur Gear	1
21	1026201	Spiral Bevel Ring Gear	1
22	1050607	Hex Head Plug	1
23	1055020	Socket Head Cap Screw	6
24	1016552	Gear Housing	1

ITEM	PART NO.	PART NAME	QTY
25	1038011	Grease Fitting	2
26	1035514	O-ring	2
27	1007336	Hex Nut, Left Hand	1
28	1007335	Hex Nut	1
29	1021327	Needle Bearing	1
30	1035435	O-ring	1
31	1004272	Split Lock Washer	2
32	1055921	Hex Head Screw	2
33	1055753	Hex Head Screw	6
34	1004232	Split Lock Washer	6
35	1016553	Intermediate Housing	1
36	1035372	O-ring	1
37	1026200	Spiral Bevel Pinion Gear	1
38	1036190	Inner Ring Bushing	1
39	1013237	External Retaining Ring	1
40	1013243	External Retaining Ring	2
41	1021329	Ball Bearing	1
42	1035537	Oil Seal	
43	1013208	Thrust Ring	1
44	1055617	Socket Head Cap Screw	6
45	1035557	Guard Gasket	1
46	1024210	Blade Guard, 16 inch	1
	1024284	Blade Guard, 18 inch	
47	1055750	Hex Head Screw	2
	3016382	Gear Housing Assembly (incls items 1, 2, 4-45)	

JARVIS®
6204004;.
PRODUCTS CORPORATION
33 ANDERSON ROAD, MIDDLETOWN, CONNECTICUT 06457-4926
UNITED STATES OF AMERICA E-MAIL.jarvis.products.corp@snet.net
TEL. 860-347-7271 FAX. 860-347-6978 WWW.jarvisproducts.com

Figure E
Thin Head Gear Housing Assembly

(Section View)

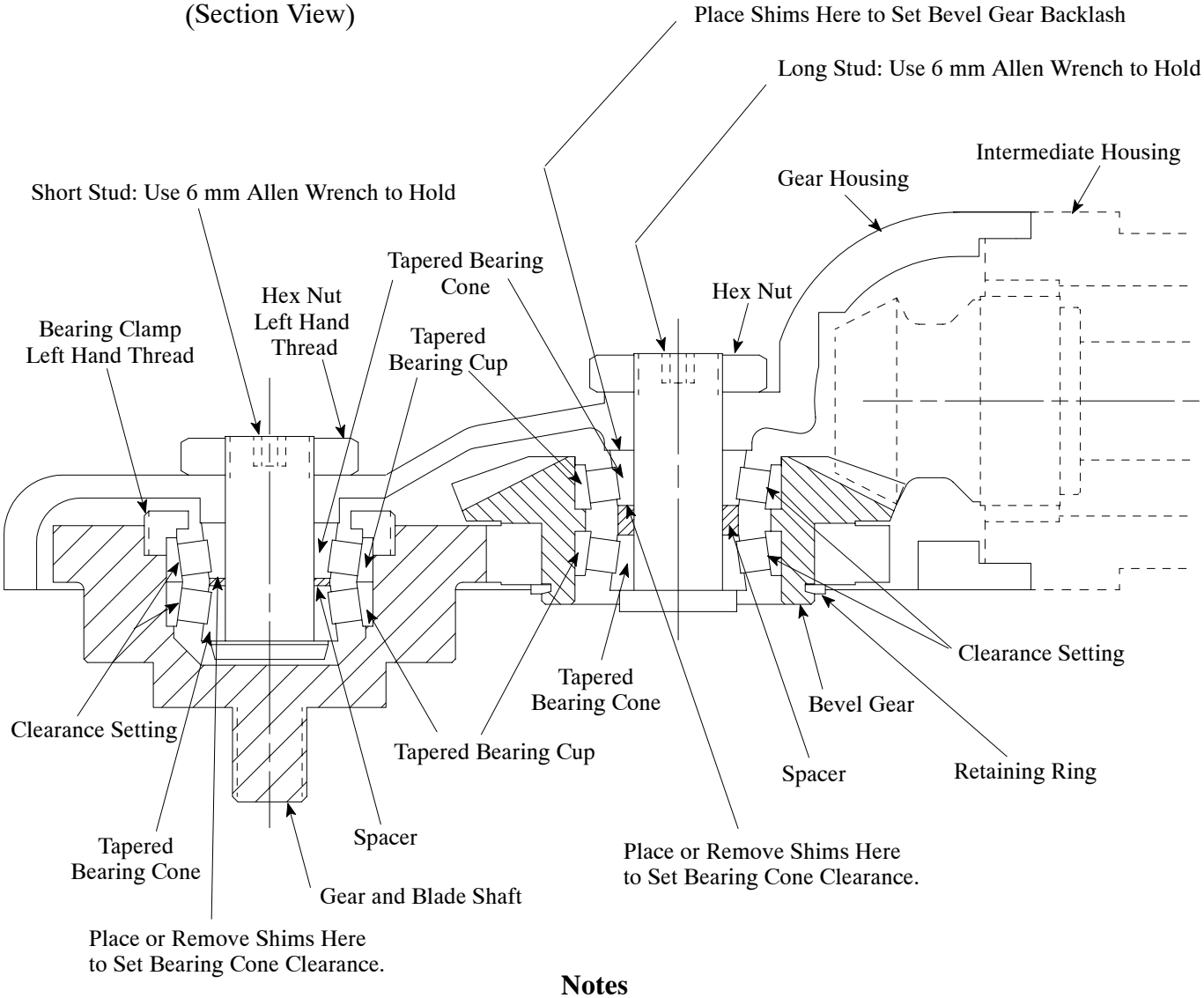

Notes

1. Set bearing cone clearance:

   IF tight, add shims to achieve proper fit; replace spacers if necessary.

   IF loose, remove shims to achieve proper fit.
2. Backlash of bevel gears should be 0.003 to 0.007 inch.
3. Bevel side of retaining ring must be facing away from gear housing.
4. Use *Loctite 262* on hex nuts.
5. Pack all bearing cones and bearing cups with **Jarvis** *1315 White Grease* when clearance adjustments are completed.

JARVIS®
6204004;.

PRODUCTS CORPORATION
33 ANDERSON ROAD, MIDDLETOWN, CONNECTICUT 06457-4926
UNITED STATES OF AMERICA E-MAIL.jarvis.products.corp@snet.net
TEL. 860-347-7271 FAX. 860-347-6978 WWW.jarvisproducts.com

Figure F
Electric Control Box
Mechanical Brakes
(Except 42 Volts)

For part numbers see Table 1

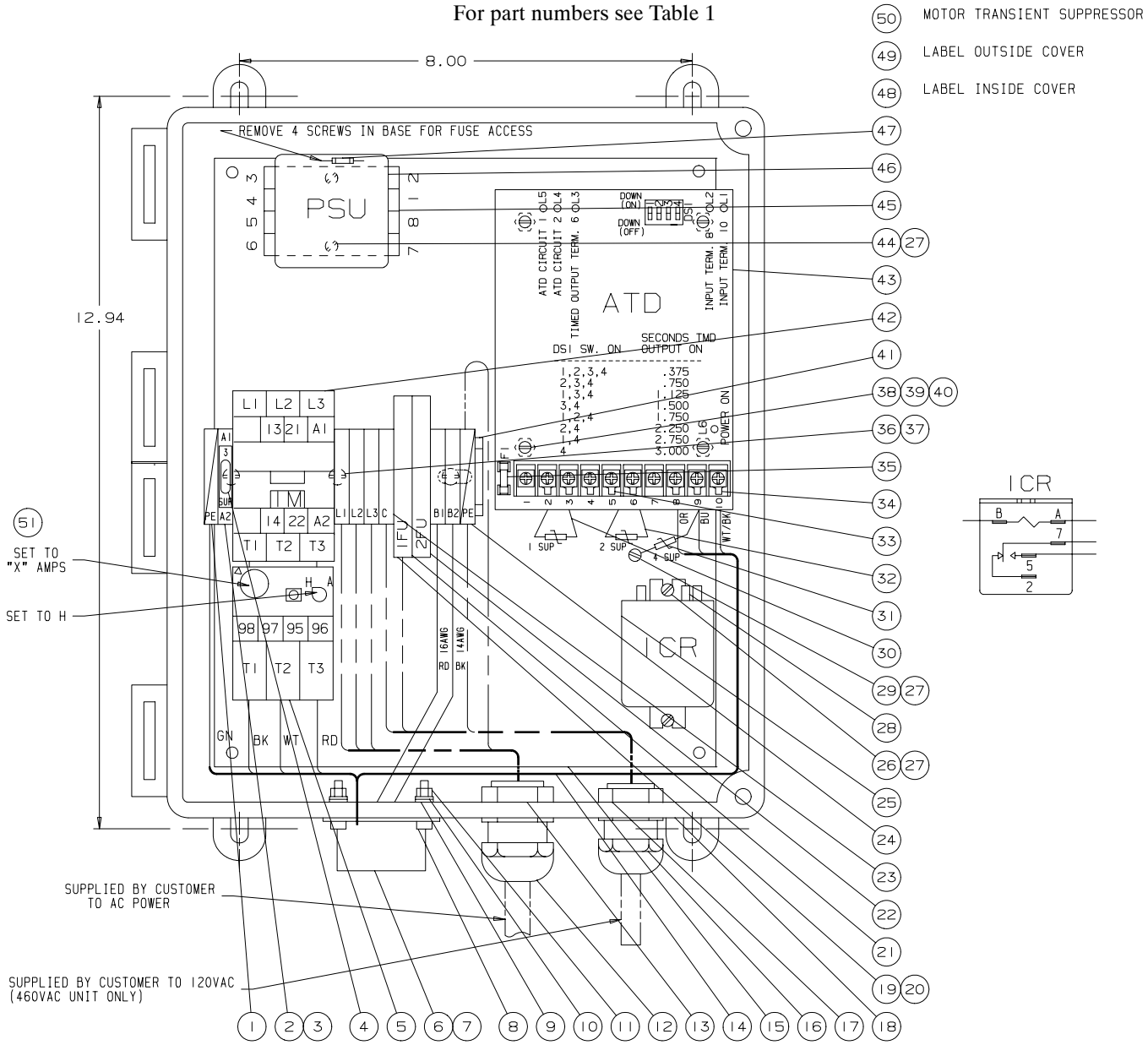

JARVIS®
6204004;.
PRODUCTS CORPORATION
33 ANDERSON ROAD, MIDDLETOWN, CONNECTICUT 06457-4926
UNITED STATES OF AMERICA E-MAIL.jarvis.products.corp@snet.net
TEL. 860-347-7271 FAX. 860-347-6978 WWW.jarvisproducts.com

Figure G
Electric Control Box 42 Volts only
Mechanical Brakes

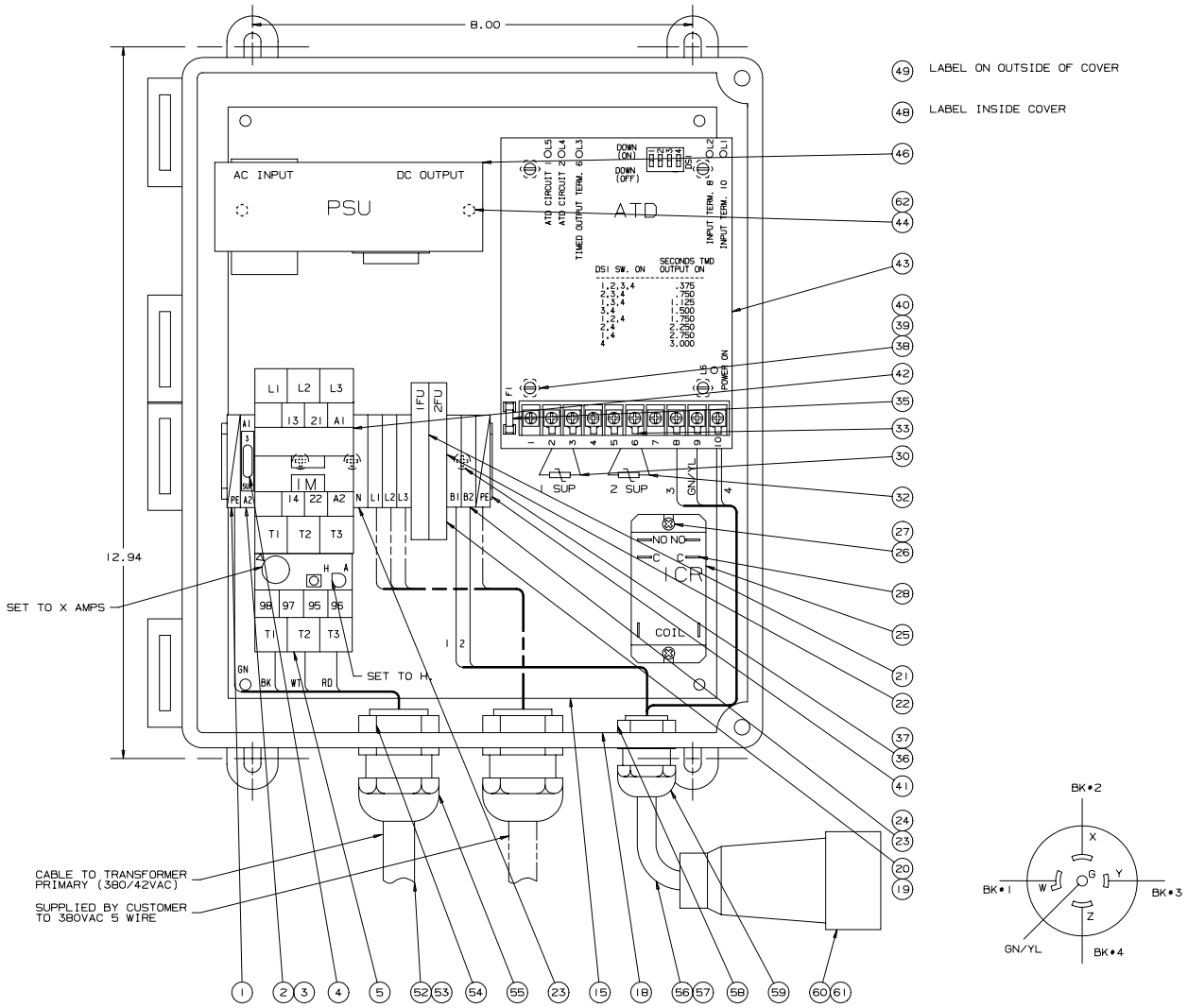

For part numbers 1-51 see Table 1

ITEM	PART NO.	PART NAME	QTY
52	1001119	Cord	4 ft
53	1061545	Ferrule	10
54	1007266	Locking Nut	2
55	1011262	Cord Connector	2
56	1001259	Cord	3 ft
57	1061613	Ferrule	7
58	1007249	Locking Nut	1
59	1011248	Cord Connector	1
60	1063747	Outlet	1
61	1063550	Grommet	1
62	1004227	Internal Lock Washer	2

JARVIS®
PRODUCTS CORPORATION
33 ANDERSON ROAD, MIDDLETOWN, CONNECTICUT 06457-4926
UNITED STATES OF AMERICA E-MAIL.jarvis.products.corp@snet.net
TEL. 860-347-7271 FAX. 860-347-6978 WWW.jarvisproducts.com

Figure H
Electrical Control Assembly
Direct Current Braking
(except 42 Volts)

(Three Phase)

For part numbers see Table 2

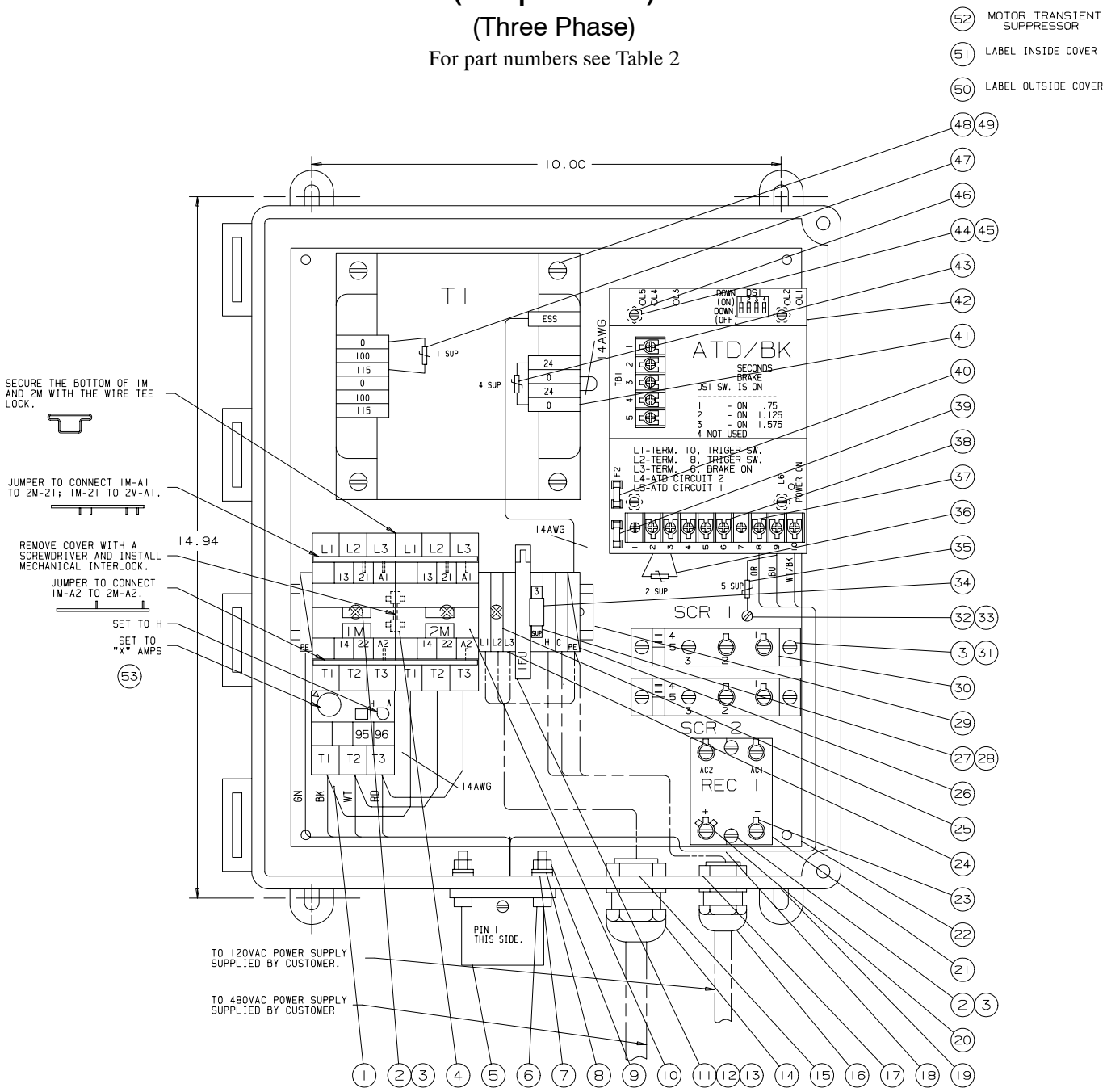

JARVIS®
6204004;.
PRODUCTS CORPORATION
33 ANDERSON ROAD, MIDDLETOWN, CONNECTICUT 06457-4926
UNITED STATES OF AMERICA E-MAIL.jarvis.products.corp@snet.net
TEL. 860-347-7271 FAX. 860-347-6978 WWW.jarvisproducts.com

Figure I

Electrical Control Assembly 42 Volts only
Direct Current Braking (Two Phase)

3063063

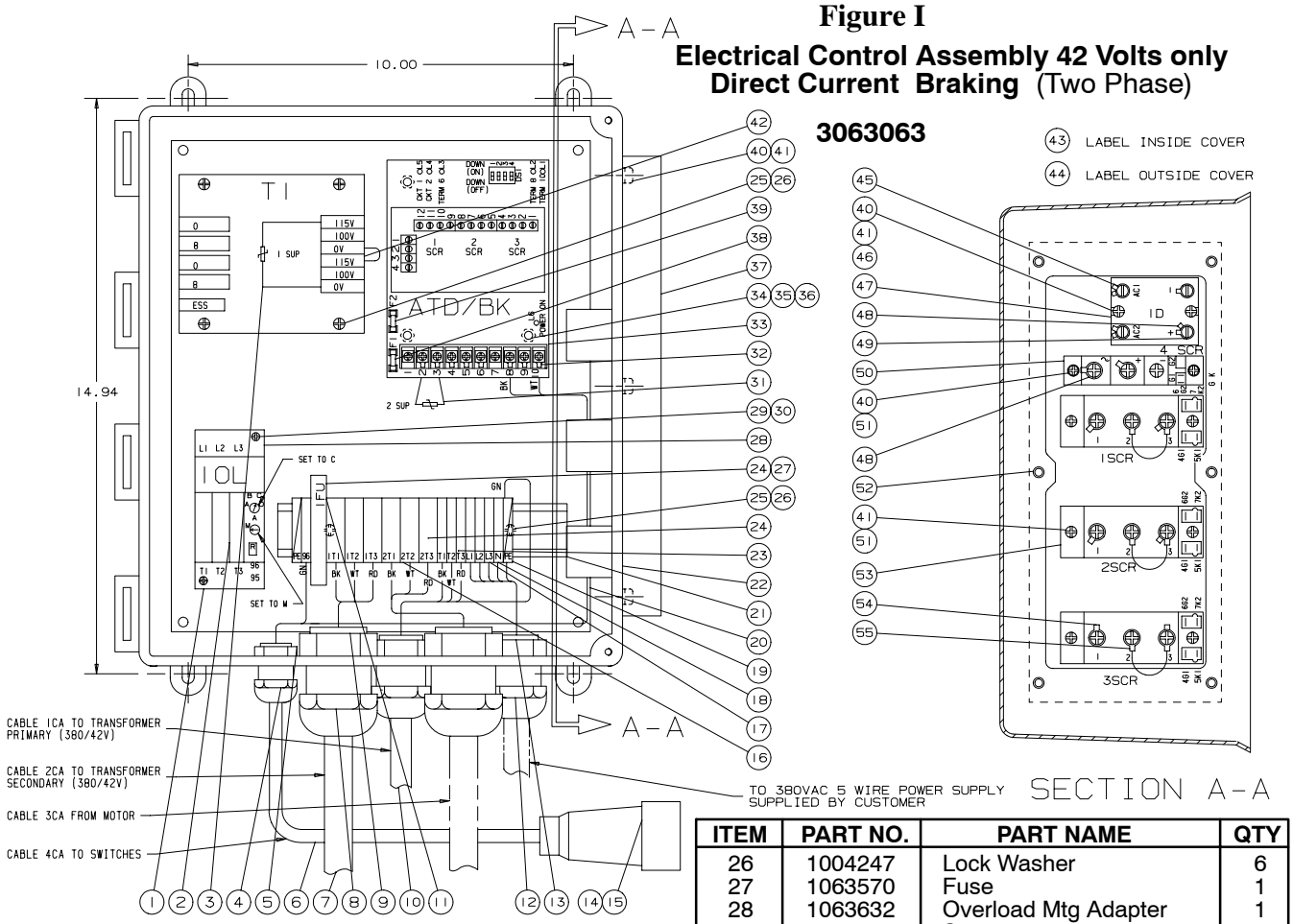

ITEM	PART NO.	PART NAME	QTY
1	1063631	Overload Relay	1
2	1063499	Heater Pack	1
3	1063757	Suppressor	1
4	1011248	Cord Connector	1
5	1007249	Locking Nut	1
6	1001014	Cord	3 ft
7	1001162	Cord	4 ft
8	1011258	Cord Connector	2
9	1007255	Locking Nut	2
10	1001119	Cord	4 ft
11	1063455	Terminal Block, Fuse	1
12	1011262	Cord Connector	2
13	1007266	Locking Nut	2
14	1063208	Outlet	1
15	1063209	Plug	1
16	1063520	Terminal Block, Gray	6
17	1063494	Terminal Block, Gray	7
18	1063495	Terminal Block, Blue	1
19	1063496	Terminal Block, Yel/Green	1
20	1032386	Mounting Plate	1
21	1042300	Terminal Rail	1
22	1016450	Electrical Enclosure	1
23	1063363	Terminal Marker	9
24	1063456	Terminal Marker	7
25	1055803	Screw	6

ITEM	PART NO.	PART NAME	QTY
26	1004247	Lock Washer	6
27	1063570	Fuse	1
28	1063632	Overload Mtg Adapter	1
29	1055863	Screw	2
30	1004242	Split Lock Washer	2
31	1063702	Suppressor	1
32	1063502	Terminal, Fork	10
33	1063571	Circuit Board, ATD	1
34	1029445	Spacer	4
35	1004244	Lock Washer	4
36	1073072	Pan Head Slotted Screw	4
37	1061617	Heat Sink	1
38	1063862	Fuse	1
39	1072310	Fuse	1
40	1055741	Cheese Head Screw	8
41	1004230	Split Lock Washer	16
42	1063607	Transformer	1
43	1017212	Wiring Diagram Label	1
44	1017085	Danger Label	1
45	1063446	Terminal, Ring	4
46	1004216	Flat Washer	2
47	1063605	Bridge Rectifier	1
48	1063744	Terminal, Ring	4
49	1063079	Terminal, Ring	1
50	1063759	SCR Rectifier	1
51	1055845	Screw	8
52	1060068	Threaded Insert	6
53	1072186	Dual SCR Rectifier	3
54	1063745	Terminal, Ring	6
55	1063633	Terminal, Ring	6

JARVIS®
PRODUCTS CORPORATION
33 ANDERSON ROAD, MIDDLETOWN, CONNECTICUT 06457-4926
UNITED STATES OF AMERICA E-MAIL.jarvis.products.corp@snet.net
TEL. 860-347-7271 FAX. 860-347-6978 WWW.jarvisproducts.com

TABLE 1 - MECHANICAL BRAKE (See Figures F and G)							
Saw Voltage/Hz		42V/50Hz	115V/50Hz	230v/60Hz	380V/50Hz	415V/50Hz	460V/60Hz
Part Number (16 inch) Blade		4004226	4004114	4004101	4004110	4004105	4004100 and 4004132 (thin)
Part Number (18 inch) Blade				4004098		4004129	4004095
Part Number (21 inch) Blade		4004113	4004097				
Control Box Number		3063196	3063161	3063162	3063197	3063180	3063147
Item	Name	Part Number					
1	Yellow/Green Block	1063496	1063521	1063496	1063496	1063496	1063496
2	Terminal Block Plug	1063823	N/A	1063823	1063823	1063823	1063823
3	Terminal Block Base	1063822	N/A	1063822	1063822	1063822	1063822
4	Suppressor 3	1063699	1063709	1063699	1063699	1063699	1063705
5	Overload Relay	1072120	1063704	1072103	1072120	1072119	1072119
6	Connector	1011262	1063761	1063752	1063752	1063752	1063752
7	Gasket/Locking Nut*	1007266*	1060085	1060085	1060085	1060085	1060085
8	Pan Head Screw	N/A	1055724	1055724	1055724	1055724	1055484
9	Flat Washer	N/A	1004225	1004225	1004225	1004225	1004274
10	Lock Washer	N/A	1004241	1004241	1004241	1004241	1004164
11	Hex Nut	N/A	1007276	1007276	1007276	1007276	1007192
12	Cord Connector	1011262	1011262	1011262	1011262	1011262	1011262
13	Locking Nut	1007266	1007266	1007266	1007266	1007266	1007266
14	Cable	N/A	1001127	1001132	1001132	1001132	1001132
15	Mounting Plate	1032482	1032464	1032465	1032465	1032465	1032452
16	Cord Connector	1011248	N/A	N/A	N/A	N/A	1011248
17	Locking Nut	1007249	N/A	N/A	N/A	N/A	1007249
18	Electric Enclosure	1016503	1016483	1016483	1016483	1016483	1016470
19	Fuse Block	1063390	1063390	1063390	1063390	1063390	1063455
20	Terminal Marker	1063456	1063456	1063456	1063456	1063456	1063456
21	Fuse (1FU)	1063768	1063762	1063768	1063768	1063768	1063542
22	Fuse (2FU)	1063797	1063763	1063763	1063763	1063763	1063473
23	Gray/Blue* Block	1063494(5) 1063495(1)*	1063520(3) 1063494(2)	1063494	1063494(5) 1063495(1)*	1063494)(5)* 1063495(1)	1063494
24	Terminal Marker	1063363	1063456(6) 1063363(2)	1063363	1063363	1063363	1063363
25	Relay	1063485	1063483	1063485	1063485	1063485	1063483
26	Pan Head Screw	1055850	1055850	1055850	1055850	1055850	1055482
27	Lock Washer	1004241	1004241	1004241	1004241	1004241	1004006
28	Female Disconnect	1063533	1063533	1063533	1063533	1063533	1063533
29	Pan Head Screw	N/A	N/A	N/A	N/A	N/A	1055490
30	Suppressor 1	1063702	1063702	1063702	1063702	1063702	1063702
31	Suppressor 4	N/A	N/A	N/A	N/A	N/A	1063702
32	Suppressor 2	1063703	1063709	1063703	1063703	1063703	1063709
33	Terminal Wire Fork	1063502	1063502	1063502	1063502	1063502	1063502
34	Terminal Wire Fork/Ring*	N/A	1063555*	1063555*	1063461	1063461	1063461
35	Fuse	1063862	1072091	1063862	1063892	1063862	1072091
36	Pan Head Screw	1055803	1055803	1055803	1055803	1055803	1055010
37	Lock Washer	1004247	1004247	1004247	1004247	1004247	1004022
38	Hex Spacer	1029445	1029445	1029445	1029445	1029445	1029445

JARVIS®
6204004;.
PRODUCTS CORPORATION
33 ANDERSON ROAD, MIDDLETOWN, CONNECTICUT 06457-4926
UNITED STATES OF AMERICA E-MAIL.jarvis.products.corp@snet.net
TEL. 860-347-7271 FAX. 860-347-6978 WWW.jarvisproducts.com

TABLE 1 - MECHANICAL BRAKE (Cont'd - See Figures F and G)							
Saw Voltage/Hz		42V/50Hz	115V/50Hz	230V/60Hz	380V/50Hz	415V/50Hz	460V/60Hz
Item	Name	Part Number					
39	Lock Washer	1004244	1004244	1004244	1004244	1004244	1004244
40	Plastic Screw	1073072	1073072	1073072	1073072	1073072	1073072
41	Terminal Rail/End Clamp	1063554	1042313/1063362	1063554	1063554	1063554	1063554/N/A
42	Contactor	1072128	1072131	1072102	1072128	1072128	1072127
43	Circuit Board	1072072	1072071	1072072	1072072	1072072	1072071
44	Screw	1055914	1055850	1055850	1055850	1055850	1055490
45	Octal Socket	N/A	1063287	1063287	1063287	1063287	1063287
46	Power Supply	1063796	1063753	1063767	1063767	1063767	1063753
47	Power Supply Fuse	N/A	1063862	1063862	1063862	1063862	1063862
48	Connection Diagram	1017289	1017267	1017270	1017279	1017279	1017262
49	Danger Label	1017085	1017085	1017085	1017085	1017085	1017085
50	Motor Transient Suppressor 5	N/A	N/A	N/A	N/A	N/A	3063288
51	" X" Amps	10.1	33.6	16.8	10.1	9.3	8.4

TABLE 2 - THREE PHASE DC BRAKE (See Figure H)												
Saw Voltage/Hz		42V/50	115V/50	200V/50	208V/60	220V/50	230V/60	380V/50	380V/60	415V/50	460V/60	575V/60
Part Number (16 inch)		4004063	4004052			4004062	4004051	4004060	4004061	4004064	4004056	4004028
Part Number (18 inch)		4004087		4004102	4004065		4004054			4004112	4004055	4004084
Part Number (21 inch)			4004083									
Control Box Number		3063063	3063176	3063168	3063175	3063164	3063164	3063174	3063174	3063173	3063151	3063172
Item	Name	Part Number										
1	Overload Relay		1063704	1072103	1072115	1072103	1072103	1072120	1072120	1072119	1072119	1072118
2	Mounting Screw		1055726	1055803	1055803	1055803	1055803	1055803	1055803	1055803	1055010	1055010
3	Lock Washer		1004261	1004247	1004247	1004247	1004247	1004247	1004247	1004247	1004022	1004022
4	Mech. Intlk. Cont.		1063707	1072096	1072096	1072096	1072096	1072096	1072096	1072096	1072096	1072096
5	Box End Connect.		1063637	1063635	1063635	1063635	1063635	1063635	1063635	1063635	1063635	1063629 1063627
6	Pan Head Screw		1055724	1055741	1055741	1055741	1055741	1055741	1055741	1055741	1055366	1055484
7	Washer		1004225	1004216	1004216	1004216	1004216	1004216	1004216	1004216	1004216	1004320
8	Lock Washer		1004241	1004230	1004230	1004230	1004230	1004230	1004230	1004230	1004005	1004006
9	Hex Nut		1007276	1007243	1007243	1007243	1007243	1007243	1007243	1007243	1007267	1007192
10	Contactor		1072131	1072104	1072130	1072102	1072102	1072128	1072128	1072128	1072127	1072124
11	Fuse Block		1063455	1063455	1063455	1063455	1063455	1063390	1063390	1063390	1063455	1063455
12	Fuse		1063771	1063771	1063771	1063771	1063771	1063781	1063781	1063781	1063539	1063539
13	Terminal Marker		1063456	1063456	1063456	1063456	1063456	1063456	1063456	1063456	1063456	1063456
14	Cord Connector		1011262	1011262	1011262	1011262	1011262	1011262	1011262	1011262	1011262	1011262
15	Locking Nut		1007266	1007266	1007266	1007266	1007266	1007266	1007266	1007266	1007266	1007266
16	Cord Connector		N/A	N/A	N/A	N/A	N/A	N/A	N/A	N/A	1011248	1011248
17	Locking Nut		N/A	N/A	N/A	N/A	N/A	N/A	N/A	N/A	1007249	1007249
18	Cable		1001132	1001132	1001132	1001132	1001132	1001132	1001132	1001132	1001132	1001132
19	Electric Enclosure		1016509	1016410	1016410	1016410	1016410	1016410	1016410	1016410	1016473	1016511
20	Wire Ring		1063079	1063079	1063079	1063079	1063079	1063079	1063079	1063079	1063079	1063079
21	Bridge Rectifier		1063605	1063605	1063605	1063605	1063605	1063605	1063605	1063605	1063605	1063605

PRODUCTS CORPORATION
33 ANDERSON ROAD, MIDDLETOWN, CONNECTICUT 06457-4926
UNITED STATES OF AMERICA E-MAIL.jarvis.products.corp@snet.net
TEL. 860-347-7271 FAX. 860-347-6978 WWW.jarvisproducts.com

TABLE 2 - THREE PHASE DC BRAKE (Cont'd - See Figure H)

Saw Voltage/Hz		42V/50	115V/50	200V/50	208V/60	220V/50	230V/60	380V/50	380V/60	415V/50	460V/60	575V/60
Item	Name	Part Number										
22	Mounting Plate		1032484	1032466	1032466	1032466	1032466	1032466	1032466	1032466	1032457	1032457
23	Wire Ring		1063446	1063446	1063446	1063446	1063446	1063446	1063446	1063446	N/A	N/A
24	Terminal Marker		1063456	1063363	1063363	1063363	1063363	1063363	1063363	1063363	1063363	1063363
25	Gray Block Blue Block		1063520 N/A	1063494 N/A	1063494 N/A	1063494 N/A	1063494 N/A	1063494 1063495	1063494 1063495	1063494 1063495	1063494	1063494
26	Yel / Green Block		1063521	1063496	1063496	1063496	1063496	1063496	1063496	1063496	1063496	1063496
27	Term. Block Base		N/A	1063822	1063822	1063822	1063822	1063822	1063822	1063822	1063822	1063822
28	Term. Block Plug		N/A	1063823	1063823	1063823	1063823	1063823	1063823	1063823	1063823	1063823
29	Terminal Rail Term. End Clamp		1063393 1063362	1063458 N/A	1063458 N/A	1063458 N/A	1063458 N/A	1063458 N/A	1063458 N/A	1063458 N/A	1063458 N/A	1063458 N/A
30	Rectifier (SCR)		1063764	1063764	1063764	1063764	1063764	1063764	1063764	1063764	1063764	1063764
31	Screw		1055758	1055758	1055758	1055758	1055758	1055758	1055758	1055758	1055366	1055366
32	Pan Head Screw		N/A	N/A	N/A	N/A	N/A	N/A	N/A	N/A	1055490	1055490
33	Lock Washer		N/A	N/A	N/A	N/A	N/A	N/A	N/A	N/A	1004006	1004006
34	Suppressor 3		1072422	1063827	1063827	1063827	1063827	1063827	1063827	1063827	1063827	1063827
35	Suppressor 5		N/A	N/A	N/A	N/A	N/A	N/A	N/A	N/A	1063702	1063702
36	Suppressor 2		1063702	1063702	1063702	1063702	1063702	1063702	1063702	1063702	1063702	1063702
37	Wire Fork		1063461	1063461	1063461	1063461	1063461	1063461	1063461	1063461	1063461	1063461
38	Wire Fork		1063502	1063502	1063502	1063502	1063502	1063502	1063502	1063502	1063502	1063502
39	Fuse, F1		1063651	1063862	1063862	1063862	1063862	1063862	1063862	1063862	1072091	1072091
40	Fuse, F2		1063651	1063862	1063862	1063862	1063862	1063862	1063862	1063862	1072310	1072091
41	Transformer		1063754	1063754	1063782	1063782	1063782	1063754	1063754	1063754	1063754	1063754
42	ATD Circuit Board		1063765	1063772	1063772	1063772	1063772	1063772	1063772	1063772	1063765	1063765
43	Suppressor 4		1063708	1063757	1063818	1063818	1063818	1063757	1063757	1063757	1063708	1063708
44	Hex Spacer		1029445	1029445	1029445	1029445	1029445	1029445	1029445	1029445	1029445	1029445
45	Lock Washer		1004244	1004244	1004244	1004244	1004244	1004244	1004244	1004244	1004244	1004244
46	Plastic Screw		1073072	1073072	1073072	1073072	1073072	1073072	1073072	1073072	1073072	1073072
47	Suppressor 1		1063708	1063757	1063757	1063757	1063757	1063757	1063757	1063757	1063708	1063708
48	Screw		1055726	1055944	1055944	1055944	1055944	1055944	1055944	1055944	1055501	1055501
49	Lock Washer		1004261	1004261	1004261	1004261	1004261	1004261	1004261	1004261	1004051	1004051
50	Danger Label		1017085	1017085	1017085	1017085	1017085	1017085	1017085	1017085	1017085	1017085
51	Wiring Diagram		1017292	1017274	1017337	1017268	1017268	1017278	1017278	1017332	1017239	1017280
52	Motor Transient Suppressor 7		N/A	N/A	N/A	N/A	N/A	N/A	N/A	N/A	3063288	3063241
53	"X" Amps		33.6	18.0	18.5	16.8	16.8	10.1	10.1	9.3	8.4	6.7

PRODUCTS CORPORATION
33 ANDERSON ROAD, MIDDLETOWN, CONNECTICUT 06457-4926
UNITED STATES OF AMERICA E-MAIL.jarvis.products.corp@snet.net
TEL. 860-347-7271 FAX. 860-347-6978 WWW.jarvisproducts.com

Wiring Diagrams
Mechanical Brakes

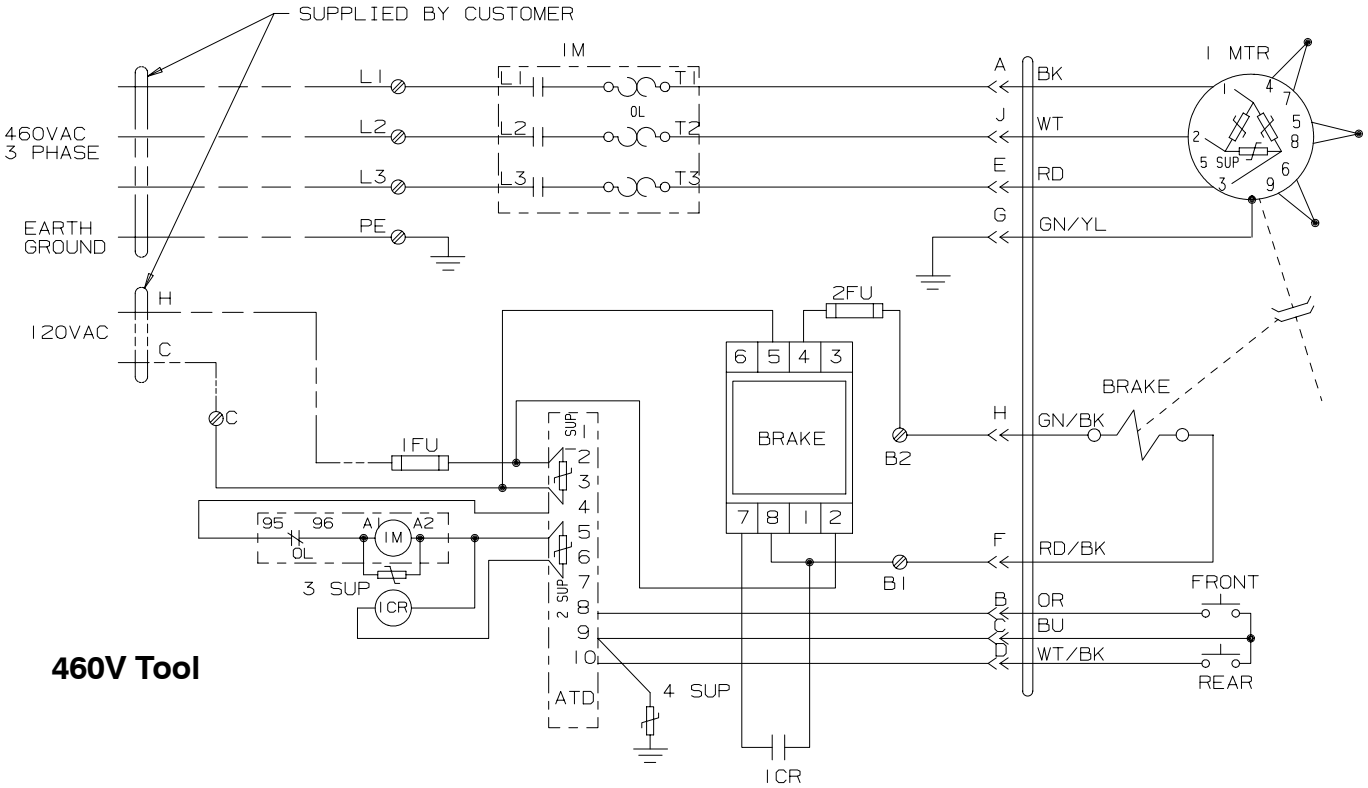

460V Tool

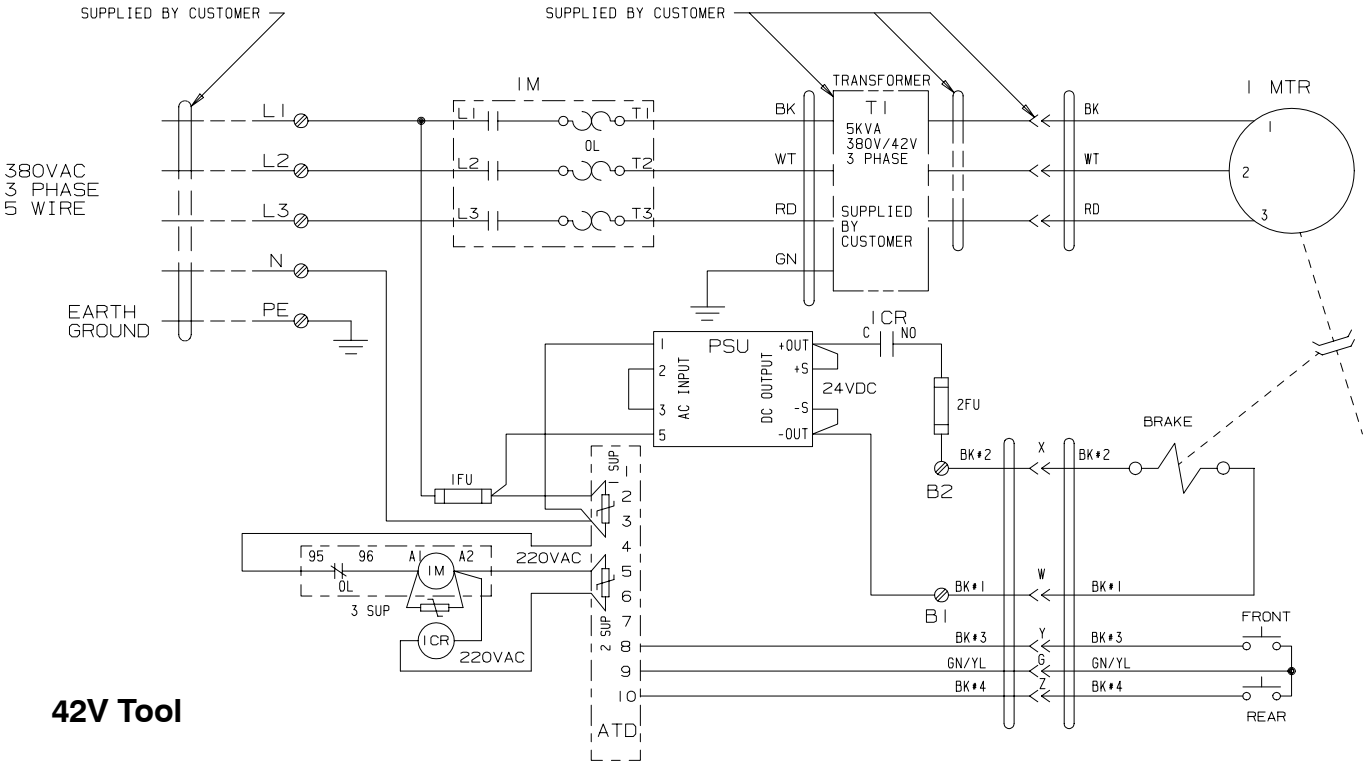

42V Tool

JARVIS®
6204004;.

PRODUCTS CORPORATION
33 ANDERSON ROAD, MIDDLETOWN, CONNECTICUT 06457-4926
UNITED STATES OF AMERICA E-MAIL.jarvis.products.corp@snet.net
TEL. 860-347-7271 FAX. 860-347-6978 WWW.jarvisproducts.com

Wiring Diagrams
Three Phase Brakes
460V Tool

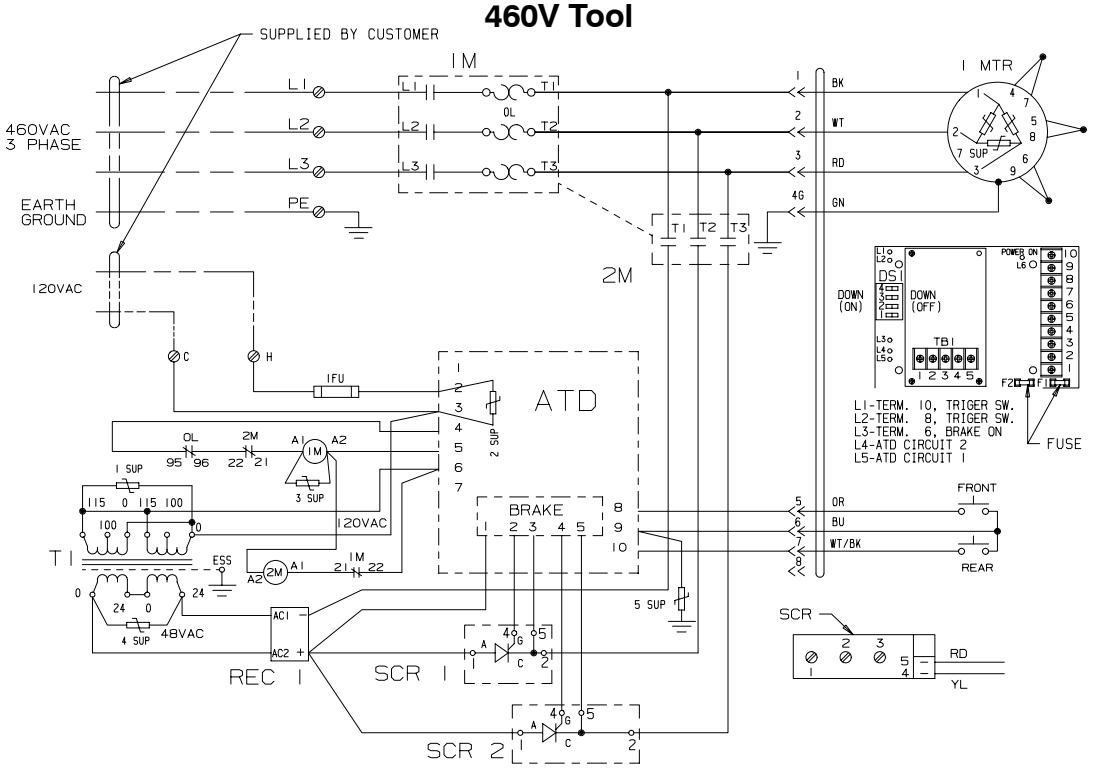

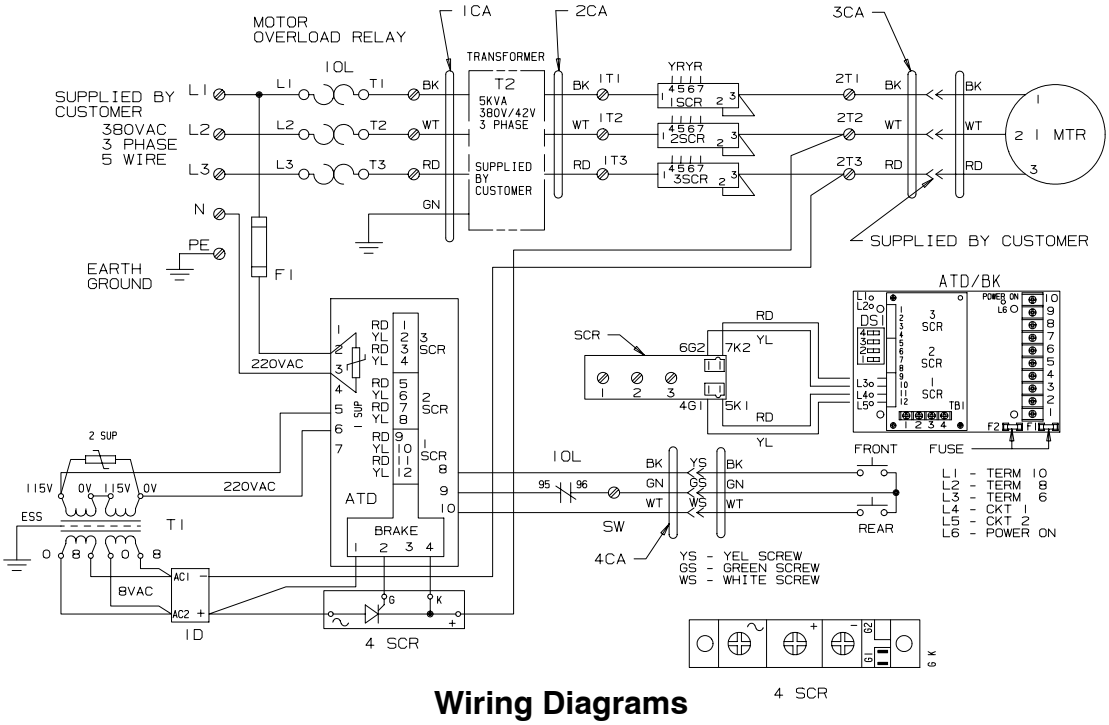

Wiring Diagrams
Two Phase Brake
42V only

JARVIS®
PRODUCTS CORPORATION
33 ANDERSON ROAD, MIDDLETOWN, CONNECTICUT 06457-4926
UNITED STATES OF AMERICA E-MAIL.jarvis.products.corp@snet.net
TEL. 860-347-7271 FAX. 860-347-6978 WWW.jarvisproducts.com

6204004;.

Wiring Diagrams
Motor Hook-up

For specific voltage and frequency, refer to
Wiring Diagram Label inside control box cover.

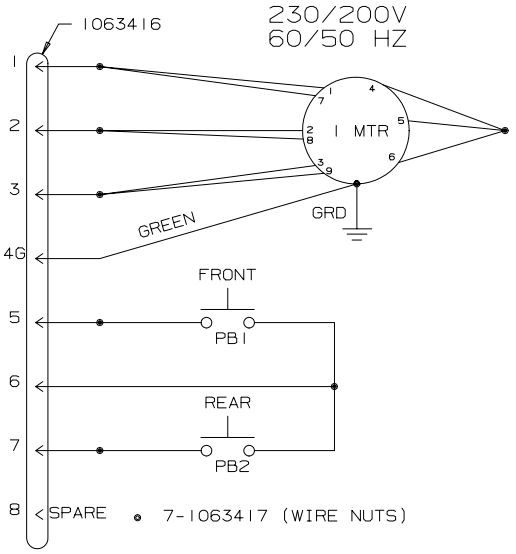

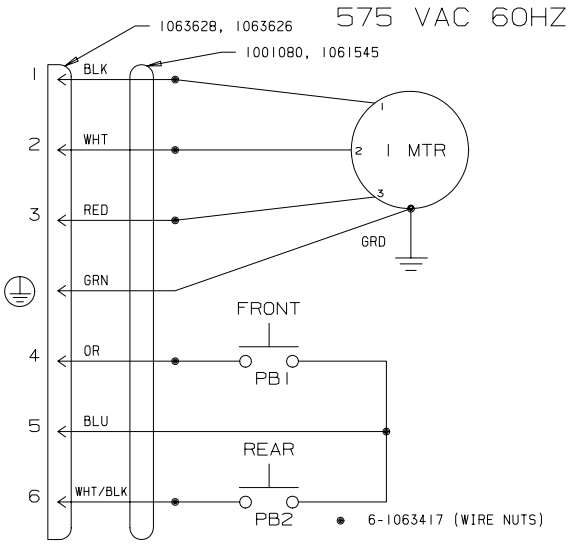

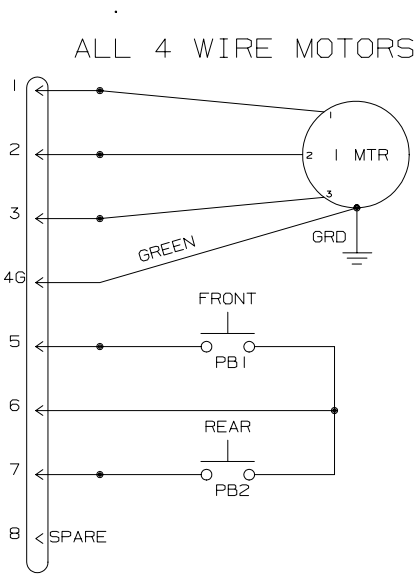

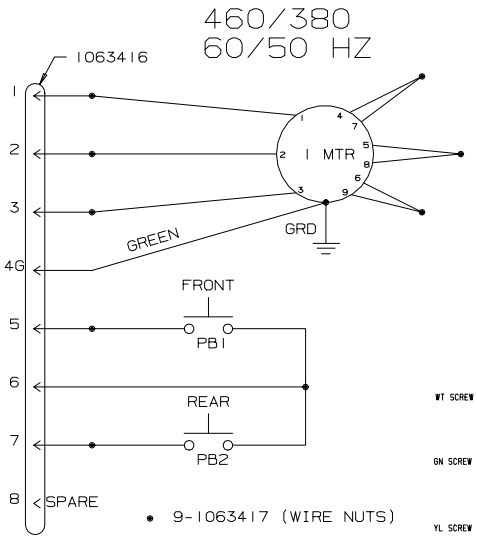

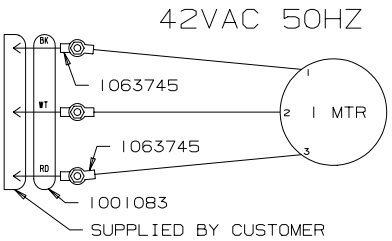

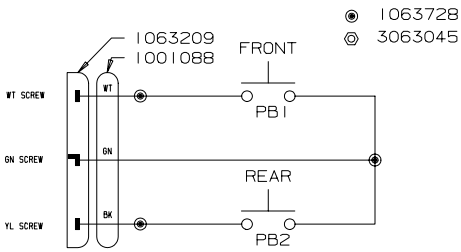

JARVIS®
PRODUCTS CORPORATION
33 ANDERSON ROAD, MIDDLETOWN, CONNECTICUT 06457-4926
UNITED STATES OF AMERICA E-MAIL.jarvis.products.corp@snet.net
TEL. 860-347-7271 FAX. 860-347-6978 WWW.jarvisproducts.com

THE FOLLOWING TOOLS ARE RECOMMENDED FOR PROPER AND EFFECTIVE ASSEMBLY AND DISASSEMBLY OF THE JARVIS MODEL SEC 400 HOG SPLITTING SAW.

COMPLETE TOOL KIT
8039097

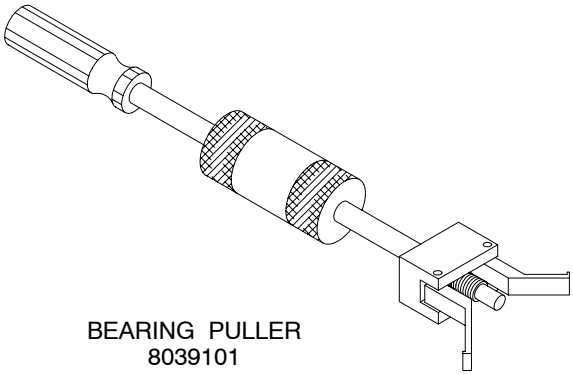

BEARING PULLER
8039101

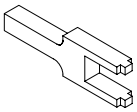

CONDUIT WRENCH
8039070

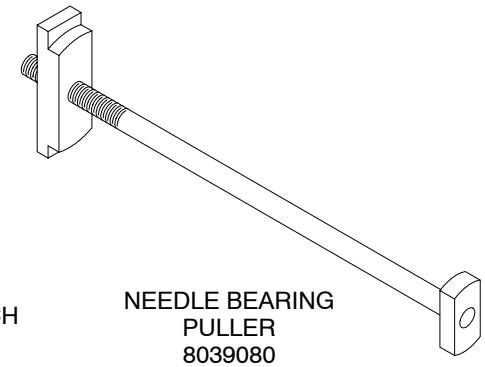

NEEDLE BEARING
PULLER
8039080

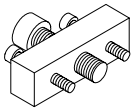

GEAR PULLER
8039096

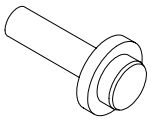

BEARING PUSHER
8039071

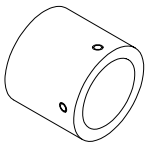

INNER RING
FIXTURE
8039102

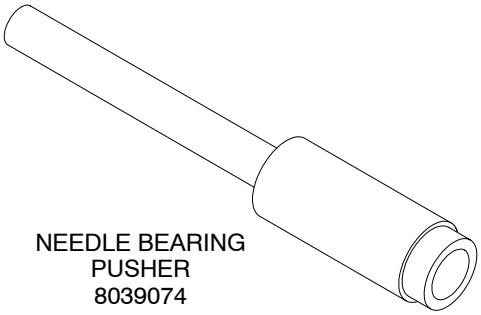

NEEDLE BEARING
PUSHER
8039074

*SPECIAL TOOLS FOR THIN HEAD MODEL SEC 400 ONLY. NOT INCLUDED IN KIT.

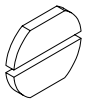

*BEARING CUP
EXTRACTOR
8039165

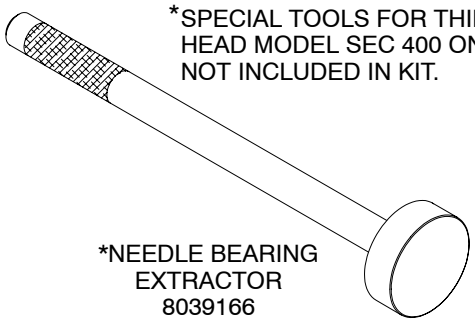

*NEEDLE BEARING
EXTRACTOR
8039166

JARVIS®
6204004;.

PRODUCTS CORPORATION
33 ANDERSON ROAD, MIDDLETOWN, CONNECTICUT 06457-4926
UNITED STATES OF AMERICA E-MAIL.jarvis.products.corp@snet.net
TEL. 860-347-7271 FAX. 860-347-6978 WWW.jarvisproducts.com

SPECIFICATIONS

Voltages 575, 460, 380, 230, 220, 208V, 3 ph, 60Hz
415, 380, 220, 115, 42V, 3 ph, 50Hz

Power	5 hp	3729 W
Capacity		750 / hour
Control Handles Electric Dual Anti-tie Down		12V
Brake	Electric or Mechanical	
Blade Diameter	16 in 18 in 21 in	406 mm 457 mm 533 mm
Blade Speed		1400 RPM
Cutting Depth (max.)	5.1 in 6.1 in 7.6 in	130 mm 155 mm 193 mm
Overall Length	37 in	940 mm
Weight (Electronic Brake) (Mechanical Brake)	110 lbs 130 lbs	49.9 kg 59 kg
Vibration	less than (<) 120 dB	<1.0 m/sec^2
Noise		85 dB

INSTALLATION INSTRUCTIONS

ALWAYS DISCONNECT THE POWER SUPPLY IN ACCORDANCE WITH OSHA'S LOCKOUT/TAGOUT PROCEDURES (29CFR 1910.147) BEFORE PERFORMING ANY REPAIRS OR MAINTENANCE.

ALL WIRING MUST BE DONE IN ACCORDANCE WITH NATIONAL, STATE AND LOCAL ELECTRICAL CODES.

1 Install the electrical control box in a convenient location.

2 Wire the electrical control box. ***Note:*** *Electrical control boxes are different for different power supplies. You must have the proper control box for your power supply. Refer to Tables 1 and 2 for applicable control box numbers.*

2.1 Attach terminals L1, L2, and L3, and earth ground to the applicable power supply. *See wiring diagram inside control box cover.*

2.2 The connection between the SEC 400 and the electrical control box is pre-wired and is approximately 20 feet long. Tighten the compression nut on the female connector to ensure proper sealing. *Refer to Figure 1.*

3 Install a balancer above the work station on a trolley.

3.1 The trolley should have sufficient travel to allow the operator to reach the entire work area.

Figure 1

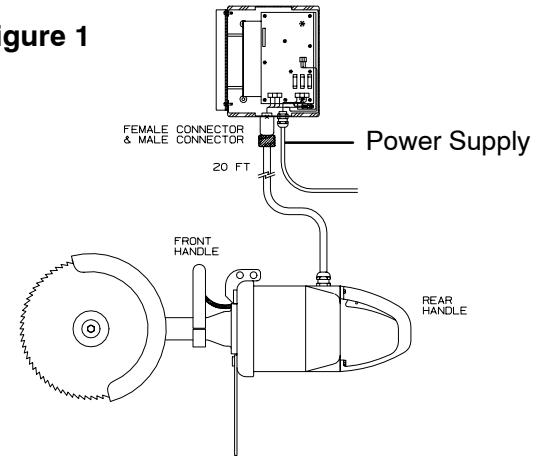

4 Suspend the SEC 400 from the balancer.

4.1 Adjust the balancer to the operator's preference.

OPERATION INSTRUCTIONS

1 Turn on the power.

2 *Each day,* before you begin operation, go through the following checklist:

2.1 Make sure that the SEC 400 moves freely on its balancer.

2.2 Make sure that the dual anti-tie down control handles (the front and the rear handles) are working correctly. **Depress** one trigger, then pause one second and depress the other trigger and the tool should not start. Repeat this procedure reversing the triggers. **Depress** both triggers simultaneously (within one half second of each other) and the tool should start. With the tool running, **release** one trigger and the tool should stop within 1.5 seconds. **Continue** holding the depressed trigger and then depress the other trigger. The tool should not start. Repeat this procedure holding the other trigger. *If the tool malfunctions, remove it from service and report the problem to your supervisor immediately.*

2.3 Make sure that the brake is working correctly. **Depress** both triggers simultaneously to start the saw. **Release** either trigger and the saw blade should stop within 1.5 seconds. *If the tool malfunctions, remove it from service and report the problem to your supervisor immediately.*

Always use two hands when starting and stopping the tool. Continue holding the tool with two hands until the saw blade comes to a complete stop.

JARVIS®
PRODUCTS CORPORATION
33 ANDERSON ROAD, MIDDLETOWN, CONNECTICUT 06457-4926
UNITED STATES OF AMERICA E-MAIL.jarvis.products.corp@snet.net
TEL. 860-347-7271 FAX. 860-347-6978 WWW.jarvisproducts.com

3 Making the cut:
- 3.1 Start the saw by depressing both triggers simultaneously.
- 3.2 Saw through the tail bone. The saw should be pointing upward when making this cut. *Do not exert pressure on the SEC 400; guide the saw to insure a straight cut.*
- 3.3 After the tail and aitch bones have been split, saw through the loin area. *The SEC 400 should be in a horizontal position during this cut.*
- 3.4 Saw through the shoulder and neck.
- 3.5 When the desired cut is achieved, release the triggers. ***Continue to hold the tool with both hands until the saw blade comes to a complete stop.***

MAINTENANCE INSTRUCTIONS

Refer to Figures A, B and D on pages 4, 5 and 7 for referenced items as applicable.

ALWAYS DISCONNECT THE POWER SUPPLY IN ACCORDANCE WITH OSHA'S LOCKOUT/TAGOUT PROCEDURES (29CFR 1910.147) BEFORE PERFORMING ANY REPAIRS OR MAINTENANCE.

1 PRIOR TO USE OR DAILY:
- 1.1 Add **Jarvis** *1315 White Grease* to grease fittings (item 8 or 25, *for thin head*). The gear housing (item 17 or 24, *for thin head*) is equipped with a hex head plug (item 54 or 22, *for thin head*) to flush out old grease as new grease is added.
- 1.2 The SEC 400 is equipped with dual anti-tie down control handles (the front and the rear handles). Check for the correct operation of the dual anti-tie down control handles before each shift every day. **Depress** one trigger, then pause one second and depress the other trigger and the tool should not start. Repeat this procedure reversing the triggers. Depress both triggers simultaneously (within one half second of each other) and the tool should start. With the tool running, **release** one trigger and the tool should stop within 1.5 seconds. **Continue** holding the depressed trigger and then depress the other trigger. The tool should not start. Repeat this procedure holding the other trigger. *If the tool malfunctions, repair or remove it from service immediately.*

  Note: The power supply must be connected to perform this maintenance check only.

2 AS REQUIRED:
- 2.1 Adjust handle grip:
  - 2.1.1 Loosen hex head screw (item 18) and set screws (item 21) to rotate front handle grip (item 23) to desired position.
  - 2.1.2 Re-tighten screws (items 18 and 21) to lock front handle grip into position.
- 2.2 Clean and inspect circular blade. *Refer to sections 3 and 4 as a procedural guide.*
- 2.3 Disassemble, clean and inspect gear housing assembly. *Refer to section 5 as a procedural guide. For thin head models refer to section 7.*
- 2.4 Disassemble, clean and inspect motor. *Refer to section 9 as a procedural guide.*

3 CIRCULAR BLADE REMOVAL:
- 3.1 Remove hex head screw (item 1), *right hand thread,* and blade clamp (item 2).
  - 3.1.1 For thin head models, remove hex nut (item 1), *right hand thread,* and blade clamp (item 2).
- 3.2 Remove circular saw blade (item 3).
- 3.3 Inspect all parts for wear and replace or sharpen if necessary.

4 CIRCULAR BLADE INSTALLATION:
- 4.1 Reverse steps and procedures outlined in section 3. *See notes below.*
  - 4.1.1 To ensure proper fit and safe operation, the hub of the saw blade (item 3) must face toward and fit securely on the extended lip of the blade mounting shaft (item 6) or gear and blade shaft (item 9, *for thin head*) as applicable. *Refer to Figs. 2 and 3 on page 22.*
  - 4.1.2 The holes on the blade clamp (item 2) must align with dowel pins (item 4 or 8, *for thin head*) on the blade mounting shaft (item 6) or gear and blade shaft (item 9, *for thin head*), as applicable. *Refer to Figures 2 and 3, as applicable.*
  - 4.1.3 Tighten hex head screw (item 1) to 65 lbf-ft.

Figure 2
Blade Installation

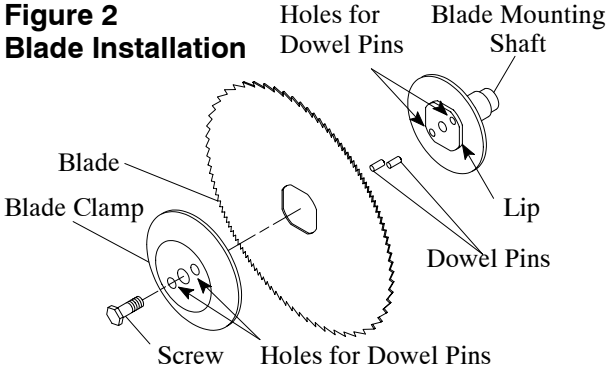

PRODUCTS CORPORATION
33 ANDERSON ROAD, MIDDLETOWN, CONNECTICUT 06457-4926
UNITED STATES OF AMERICA E-MAIL.jarvis.products.corp@snet.net
TEL. 860-347-7271 FAX. 860-347-6978 WWW.jarvisproducts.com

Figure 3
Blade Installation
(Thin Head only)

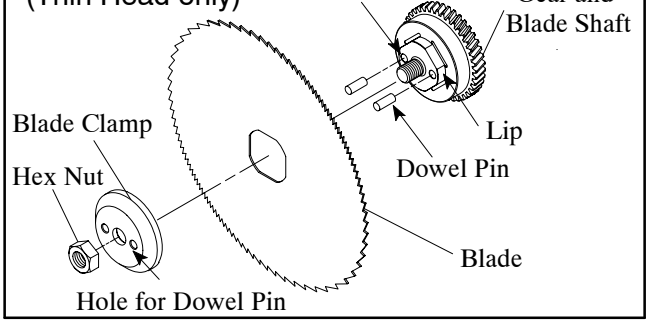

5 GEAR HOUSING DISASSEMBLY:

For thin head gear housing disassembly, see section 7.

5.1 Remove circular blade. Follow steps and procedures outlined in section 3.

5.2 Remove socket head screws (item 52) and separate front handle assembly from gear housing.

5.3 Remove hex head screws (item 56).

5.4 Remove blade guard (item 55) and guard gasket (item 51).

5.5 Remove hex head screws (item 34) and split lock washers (item 35). Separate gear housing from motor.

5.6 Remove socket head screws (item 46) and thrust ring (item 45).

5.7 Remove splined coupling (item 47) and o-ring (item 48).

5.8 Remove pinion shaft assembly (items 38 and 40-44) out of the "motor end" of gear housing (item 17) and disassemble.

5.8.1 To remove inner ring bushing (item 40) from pinion shaft (item 38), use **Jarvis** special tool, part number 8039102.

5.9 Remove o-ring (item 36).

5.10 Remove socket head screws (item 7).

5.11 Remove gear assembly (items 4-6 and 8-15).

5.11.1 Lightly tap on gear housing (item 17) with a nylon mallet while pulling on gear box cover (item 9).

5.12 Remove cylindrical bearing (item 16) from gear housing (item 17).

5.12.1 Heat gear housing (item 17) to 200°F. Use **Jarvis** special tool, part number 8039101, to lift bearing out of gear housing. *Discard bearing - do not re-use.*

5.13 Remove needle bearing (item 37) from gear housing (item 17).

5.13.1 Heat gear housing (item 17) to 200°F. Use **Jarvis** special tool, part number 8039080, to pull needle bearing (item 37) out of "motor end" of gear housing (item 17). *Discard bearing - do not re-use.*

5.14 Disassemble gear assembly (items 4-6 and 8-15).

5.14.1 Remove retaining ring (item 15).

5.14.2 Remove both spiral bevel gear (item 14) and ball bearing (item 13) from blade mounting shaft (item 6). Use a common gear puller or **Jarvis** special tool, part number 8039096, to remove spiral bevel gear. The spiral bevel gear is threaded to allow screws to connect gear to puller.

5.14.3 Remove bearing plate (item 12), shaft seal (item 11), o-ring (item 10) and gear box cover (item 9).

5.14.4 Remove dowel pins (item 4) and keys (item 5) from blade mounting shaft (item 6).

5.15 Inspect all parts for wear and replace if necessary.

6 GEAR HOUSING ASSEMBLY:

For thin head gear housing assembly, see section 8.

6.1 Reverse steps and procedures outlined in section 5. *See special notes below:*

6.1.1 Cylindrical bearing (item 16) should be installed using **Jarvis** special tool, part number 8039071. It is recommended that gear housing (item 17) be preheated to 200°F to ease installation.

6.1.2 Needle bearing (item 37) should be installed from "motor end" of gear housing (item 17) using **Jarvis** special tool, part number 8039074. It is recommended that gear housing (item 17) be preheated to 200°F to ease installation.

6.1.3 Install inner ring bushing (item 40) using **Jarvis** special tool, part number 8039102.

6.1.4 Pack bearings with **Jarvis** *1315 White Grease* prior to placing gear shaft assembly (items 4 - 15) into gear housing (item 17).

7 THIN HEAD GEAR HOUSING DISASSEMBLY:

Refer to Figure D on page 7 for referenced items unless otherwise noted. Refer to Figure E on page 8 as a procedural guide.

7.1 Remove circular blade. Follow steps and procedures for thin head blade removal outlined in section 3.

PRODUCTS CORPORATION
33 ANDERSON ROAD, MIDDLETOWN, CONNECTICUT 06457-4926
UNITED STATES OF AMERICA E-MAIL.jarvis.products.corp@snet.net
TEL. 860-347-7271 FAX. 860-347-6978 WWW.jarvisproducts.com

7.2 Remove socket head screws (item 52, Figure A, page 4) and separate front handle assembly from intermediate housing (item 35).

7.3 Remove hex head screws (item 47).

7.4 Remove blade guard (item 46) and guard gasket (item 45).

7.5 Remove hex head screws (item 33) and split lock washers (item 34). Remove gear housing (item 24) and intermediate housing (item 35) together as one unit, from motor.

7.6 Remove socket head screws (item 23) and gear box cover (item 4).

7.7 Remove hex nut (item 27), *left hand thread.*

7.7.1 Hold short stud (item 10) from moving with 6 mm allen wrench while unscrewing hex nut (item 27), *left hand thread . Use heat to loosen hex if necessary.*

7.8 Remove gear and blade shaft (item 9) and gear bearing assembly (items 10-15), together as one unit, from gear housing (item 24).

7.9 Unscrew bearing clamp (item 15, *left hand thread)* and pull short stud, bearing cones, spacer, shims and bearing cups (items 10 - 14) as one unit out from gear and blade shaft (item 9).

7.10 Disassemble the gear bearing assembly.

7.10.1 Remove short stud (item 10) to separate bearing cones (item 11) and bearing cups (item 12).

7.11 Remove hex nut (item 28).

7.11.1 Hold long stud (item 16) from moving with 6 mm allen wrench while unscrewing hex nut (item 28). *Use heat to loosen hex if necessary,*

7.12 Slide bevel and spur gear assembly (items 11, 12, 14 and 16 - 21) out of gear housing (item 24). *Be careful not to lose or damage shims (item 14).*

7.13 Disassemble the bevel and spur gear bearing assembly.

7.13.1 Remove long stud (item 16) and separate gear assembly.

7.13.1.1 Press bearing cups (item 12) with an arbor press and **Jarvis** special tool, part number 8039165 from bevel gear (item 21).

7.13.2 Remove external retaining ring (item 18) and slide off spur gear (item 20) from bevel gear (item 21).

7.14 Remove splined coupling (item 47, Figure A, page 4) and o-ring (item 48, Figure A, page 4).

7.15 Remove socket head screws (item 44) and thrust ring (item 43).

7.16 Remove pinion shaft assembly (items 37 - 41) out from the "motor end" of intermediate housing (item 35) and disassemble.

7.16.1 Remove external retaining ring (item 40) and press ball bearing (item 41) from shaft of pinion gear (item 37).

7.16.2 To remove inner ring bushing (item 38) from pinion gear shaft (item 37), use **Jarvis** special tool, part number 8039102.

7.17 Remove screws (item 32) and washers (item 31) and separate gear housing (item 24) from intermediate housing (item 35).

7.18 Press out needle bearing (item 29) from intermediate housing (item 35) using **Jarvis** special tool, part number 8039166.

7.19 Inspect all parts for wear and replace if necessary.

8 THIN HEAD GEAR HOUSING ASSEMBLY:

Refer to Figure E on page 8 as a guide.

8.1 Reverse steps and procedures outlined in section 7. *See special notes below.*

8.1.1 Install inner ring bushing (item 38) using **Jarvis** special tool, part number 8039102.

8.1.2 If replacing tapered bearing cones and cups (items 11 and 12), proper clearance between them must be set with spacers (items 13 and 17) and shims (item 14). **Note:** Shim package (item 14) contains 3 shims 0.005 inch thick and 6 shims 0.002 inch thick. Install only as many shims as necessary to achieve proper clearance.

8.1.2.1 When assembled, there should be a slight resistance to the rotation of the gear and blade shaft (item 9). A slight clearance between the bearing cone and bearing cup is acceptable as long as the gear assembly is stable with no side to side play on the stud.

8.1.2.2 If bearing cones are tight (with not enough clearance between bearing cones and bearing cups), add shims until proper clearance is achieved. Replace spacer if necessary.

8.1.2.3 If bearing cups are loose (with too much clearance between bearing cones and bearing cups), remove shims until proper clearance is achieved.

PRODUCTS CORPORATION
33 ANDERSON ROAD, MIDDLETOWN, CONNECTICUT 06457-4926
UNITED STATES OF AMERICA E-MAIL.jarvis.products.corp@snet.net
TEL. 860-347-7271 FAX. 860-347-6978 WWW.jarvisproducts.com

8.1.3 Install shims (item 14) between gear housing (item 24) and bearing cone (item 11) to set backlash (0.003 to 0.007 inch) between bevel gear (item 21) and pinion gear (item 37). Make sure tapered bearing cones and bearings cups are installed correctly. Refer to *Figure E for proper placement of shims and orientation of bearing cones and bearing cups.*

8.1.4 Pack bearing cones and bearing cups with **Jarvis** *1315 White Grease* after all clearance adjustments have been made.

8.1.5 Make sure bevel side of retaining ring (item 18) is facing outward away from gear housing (item 24). *Refer to Figures D and E as guide for proper orientation of retaining ring.*

8.1.6 Apply *Loctite 262* on hex nuts (items 27 and 28).

8.1.7 Bearing clamp (item 15) and hex nut (item 27) have left hand threads.

8.1.8 Make sure o-ring (items 7, 26, 30 and 36) are properly installed.

9 MOTOR DISASSEMBLY:

Refer to Figure A on page 4.

9.1 Remove socket head screws (item 52) and separate front handle assembly from gear housing (item 17) or intermediate housing (item 35, *for thin head*).

9.2 Remove hex head screws (item 34) and split lock washers (item 35). Separate motor from gear housing (item 17).

9.2.1 For thin head model, remove hex head screws (item 33) and split lock washers (item 34). Separate motor from intermediate housing (item 35).

9.3 Rest motor on front motor cover (item 62).

9.4 Remove screws (item 103) and air inlet plate (item 104).

9.5 Remove socket head screws (items 105 and 107) and split lock washers (item 61).

9.6 Remove both fan cover (item 108) and rear handle assembly together. The wires must be fed through motor conduit (item 89) as you remove the fan cover and rear handle assembly.

9.7 Remove fan (item 76) and shaft seal (item 73).

9.8 Lay motor on its side.

9.9 Remove front motor cover (item 62) and rotor (item 69) together by gently tapping the cover away from rest of motor.

9.10 Remove screws (item 68) and bearing retaining ring (item 67) to separate rotor from cover.

9.11 Lift away rotor (item 69).

9.12 Remove wave spring (71) and o-ring (63).

9.13 Remove electrical box cover (item 93).

9.14 Remove all wire nuts on wires leading to motor. *Do not remove wire nuts on wires leading to trigger handles.*

9.15 Loosen motor conduit (item 89) two or three turns with **Jarvis** special tool part no. 8039070.

9.16 Lift off rear motor cover (item 72) and remove o-ring (item 63).

9.17 If stator (item 64) needs rewinding, send entire SEC 400 motor and stator back to **Jarvis** for repair. *Do not remove stator from its housing.*

9.18 Inspect parts for wear and replace if necessary.

10 MOTOR ASSEMBLY:

10.1 Reverse steps and procedures outlined in section 9. *See special notes below:*

10.1.1 Ensure that motor cover (item 109) is fully seated into front motor cover (item 62).

10.1.2 Lightly lubricate shaft seal (item 73), o-ring (item 91) and grommet (item 90).

10.1.3 Be sure to install wave spring (item 71), o-rings (item 63) and fan (item 76).

10.1.4 Before installing fan cover (item 108), screw in motor conduit (item 89) all the way, then back it off 2 or 3 turns. Hold fan cover (item 108) over motor with motor resting on front motor cover (item 62). Slip stator wires through motor conduit (item 89). Seat fan cover (item 108) completely on motor assembly, keeping stator wires taut at all times.

10.1.5 Secure fan cover (item 108) with socket head screws (items 105 and 107) and split lock washers (item 61). Tighten motor conduit (item 89), using **Jarvis** special tool, part number 8039070.

10.1.6 Inspection plug (item 106) is provided in fan cover (item 108) to make sure that motor conduit (item 89) has entered rear motor cover (item 72) correctly. Use plug (item 106) to ensure that grommet (item 90) is in place and no motor wires are visible.

10.1.7 After completing assembly of motor, ensure that rotor turns freely by hand. ***Do not connect to power if rotor does not turn freely.***

PRODUCTS CORPORATION
33 ANDERSON ROAD, MIDDLETOWN, CONNECTICUT 06457-4926
UNITED STATES OF AMERICA E-MAIL.jarvis.products.corp@snet.net
TEL. 860-347-7271 FAX. 860-347-6978 WWW.jarvisproducts.com